Polo 1995 ➤

Direct injection and glow plug system with unit injectors

Engine ID	AMF								

Edition 10.1999

Protected by copyright. Copying for private or commercial purposes, in part or in whole, is not permitted unless authorised by Volkswagen AG. Volkswagen AG does not guarantee or accept any liability with respect to the correctness of information in this document. Copyright by Volkswagen AG.

satelettronica

List of Workshop Manual Repair GroupsList of Workshop Manual Repair GroupsList of Workshop Manual Repair Groups

Polo 1995 ➤

Direct injection and glow plug system with unit injectors

Protected by copyright. Copying for private or commercial purposes, in part or in whole, is not permitted unless authorised by Volkswagen AG. Volkswagen AG does not guarantee or accept any liability with respect to the correctness of information in this document. Copyright by Volkswagen AG.

Repair Group

01 - Self-diagnosis

23 - Mixture preparation, Injection

28 - Glow plug system

satelettronica

Technical information should always be available to the foremen and mechanics, because their careful and constant adherence to the instructions is essential to ensure vehicle road-worthiness and safety. In addition, the normal basic safety precautions for working on motor vehicles must, as a matter of course, be observed.

All rights reserved.
No reproduction without prior agreement from publisher.

Copyright © 2010 Volkswagen AG, Wolfsburg

Contents

01 - Self-diagnosis . . . 1

1 Self-diagnosis . . . 1
1.1 Self-diagnosis . . . 1
1.2 Features of self-diagnosis . . . 1
1.3 Technical data of self-diagnosis . . . 1
1.4 Connecting fault reader V.A.G 1551 and selecting engine control unit . . . 2
1.5 Connecting Vehicle Diagnosis, Testing and Information system VAS 5051 and selecting engine electronics control unit . . . 4

2 Fault memory . . . 7
2.1 Fault memory . . . 7
2.2 Interrogating fault memory . . . 7
2.3 Erasing fault memory . . . 8

3 Fault table: Fault codes 00515...01282 . . . 9
3.1 Fault table: Fault codes 00515...01282 . . . 9

4 Fault table: Fault codes 16485...18076 . . . 11
4.1 Fault table: Fault codes 16485...18076 . . . 11

5 Final control diagnosis . . . 21
5.1 Final control diagnosis . . . 21
5.2 Performing final control diagnosis . . . 21

6 Measured value blocks . . . 24
6.1 Measured value blocks . . . 24
6.2 Safety precautions . . . 24
6.3 Reading measured value block . . . 24
6.4 Measured values at idling speed . . . 25
6.5 Measured values at full throttle . . . 32

23 - Mixture preparation, Injection . . . 37

1 Servicing Diesel direct injection system . . . 37
1.1 Servicing Diesel direct injection system . . . 37
1.2 Safety precautions . . . 37
1.3 Rules for cleanliness . . . 37
1.4 Fitting locations overview . . . 38
1.5 Servicing intake manifold flap . . . 41
1.6 Servicing unit injector . . . 43
1.7 Removing and installing O rings for unit injector . . . 46
1.8 Removing and installing unit injector . . . 48

2 Checking components and functions . . . 52
2.1 Checking components and functions . . . 52
2.2 Checking Diesel direct injection system voltage supply . . . 52
2.3 Checking engine speed sender . . . 53
2.4 Checking intake manifold pressure sender and elevation sender . . . 54
2.5 Checking coolant temperature sender . . . 56
2.6 Checking brake light switch and brake pedal switch . . . 58
2.7 Checking clutch pedal switch . . . 59
2.8 Checking intake manifold temperature sender . . . 61
2.9 Checking fuel temperature sender . . . 63
2.10 Checking air mass meter . . . 65
2.11 Checking intake manifold flap change-over . . . 68
2.12 Checking unit injector valves . . . 70
2.13 Checking camshaft position Hall sender . . . 73

3 Checking additional signals . . . 74
3.1 Checking additional signals . . . 74
3.2 Checking speed signal . . . 74

Reproduced or transmitted only with our express permission. Copyright by Volkswagen AG. Volkswagen AG does not guarantee or accept any liability with respect to the correctness of information in this document. Copyright by Volkswagen AG. Reproduced or transmitted only with our express permission. Copyright by Volkswagen AG. Volkswagen AG does not guarantee or accept any liability with respect to the correctness of information in this document. Copyright by Volkswagen AG.
satelettronica

3.3 Checking signals from/to air conditioning system 76
3.4 Checking engine speed signal 78
3.5 Checking cruise control system (CCS) 79
3.6 Checking data bus 81

4 Replacing, coding and matching engine control unit 81
4.1 Replacing, coding and matching engine control unit 81
4.2 Replacing engine control unit 81
4.3 Coding engine control unit 82
4.4 Matching engine control unit to electronic immobilizer 83

28 - Glow plug system 85

1 Checking glow plug system 85
1.1 Checking glow plug system 85
1.2 Checking glow plugs 86

Protected by copyright. Copying for private or commercial purposes, in part or in whole, is not permitted unless authorised by Volkswagen AG. Volkswagen AG does not guarantee or accept any liability with respect to the correctness of information in this document. Copyright by Volkswagen AG.

satelettronica

01 - Self-diagnosis

1 - Self-diagnosis

1.1 - Self-diagnosis

1.2 - Features of self-diagnosis

The control unit for the Diesel direct injection system is equipped with a fault memory.

The engine control unit, after evaluating the information received, differentiates between more the 70 different faults => Fault table Page 11 and stores these until the fault memory contents are erased.

Faults which only occur sporadically will have the addendum "sporadic fault" on the print out. These faults will be indicated on the display by the addendum "/SP". The cause of sporadic faults can be e.g. a loose contact or a brief open circuit. If a sporadic fault does not occur again within 50 engine starts, it will be erased from the fault memory.

If faults are recognized, that affect the driving condition then the glow period warning lamp flashes.

The faults stored can be read-out with the fault reader V.A.G 1551 or the vehicle system tester V.A.G 1552 => Page 7 .

The fault memory must be erased after the faults has been eliminated => Page 8 .

Note:

General information for self-diagnosis is in the fault reader V.A.G 1551 and the vehicle system tester V.A.G 1552 instruction manuals.

1.3 - Technical data of self-diagnosis

Equipment

- The data transfer between control unit and fault reader V.A.G 1551 or vehicle system tester V.A.G 1552 is carried out in the operating mode "Rapid data transfer".
- Fault memory: Non-volatile memory and volatile memory1)

1) Will be cancelled after 50th engine start if fault has not occurred again.

Interrogating control unit versions

The control unit version is displayed when the fault reader V.A.G 1551 or the vehicle system tester V.A.G 1552 is connected and engine electronics control unit selected => Page 2 .

Functions which can be selected with V.A.G 1551 or V.A.G 1552.

Note:

The prerequisites for selecting the desired functions can be taken from the following table.

Protected by copyright. Copyright by Volkswagen AG. Volkswagen AG does not guarantee or accept any liability with respect to the correctness of information in this document. Copying for private or commercial purposes, in part or in whole, is not permitted unless authorised by Volkswagen AG.
satelettronica

Selectable functions under address word 01, Engine electronics

Function		Prerequisite		
Functions on fault reader V.A.G 1551 or on system tester V.A.G 1552		Engine stopped, ignition switched on	Engine running at idling speed	Vehicle being driven
01	Interrogate control unit version	yes	yes	yes
02	Interrogate fault memory	yes1)	yes	yes
03	Final control diagnosis	yes	yes	no
04	Basic setting	no	yes	no
05	Erase fault memory	yes	yes	yes
06	End output	yes	yes	yes
07	Code control unit	yes	no	no
08	Read measured value block	yes	yes	yes

1) Only carry out with ignition switched on, when engine does not start.

1.4 - Connecting fault reader V.A.G 1551 and selecting engine control unit

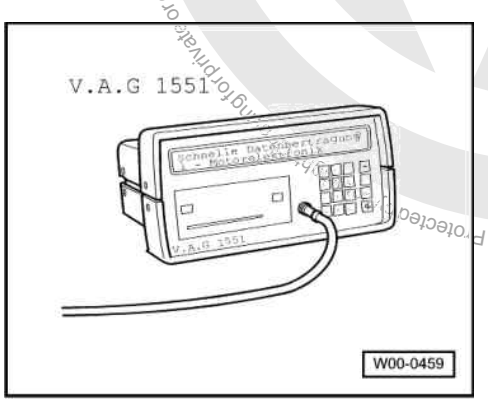

Special tools, workshop equipment, testers, measuring instruments and auxiliary items required

- -> V.A.G 1551 Fault reader

Note:

The vehicle system tester V.A.G 1552 can be used instead of the fault reader V.A.G 1551, however a print-out is not possible.

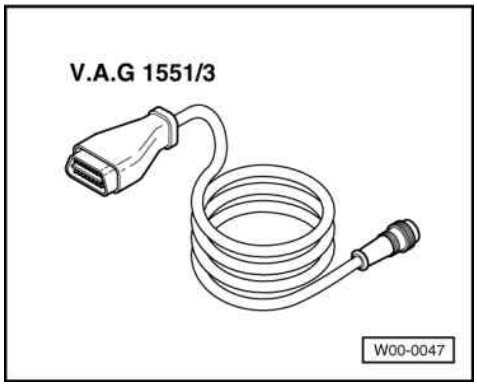

satelettronica

- -> V.A.G 1551/3 Cable

Test conditions

- Fuse SB11 OK.
- The battery voltage must be at least 11.5 V.
- Earth connections on engine and gearbox OK.

Work sequence

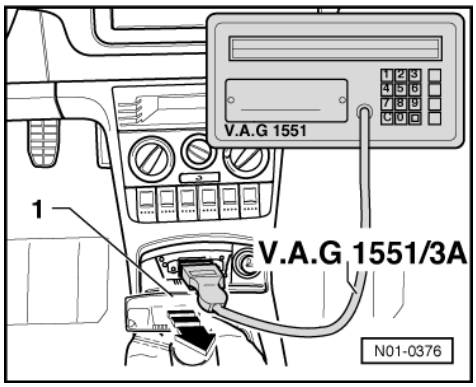

- -> Pull out ashtray -1-.
- Connect fault reader V.A.G 1551 with cable V.A.G 1551/3.

After the fault reader has been connected:

- Depending upon desired function:
  Switch ignition on
  or
  Start engine => Page 2 , Table "Selectable functions".

Notes:

- If the display remains blank, check voltage supply for diagnostic connection according to fault finding programme:

=> Current flow diagrams, Electrical fault finding and Fitting locations binder

- If the display does not indicate as described in the work sequence:

=> Fault reader operating instructions

- If due to an input fault "Fault in the data transfer!" is displayed, pull wire off fault reader, reconnect and repeat work step.

-> Indicated on display:

```
V.A.G - SELF DIAGNOSIS     HELP
     1 - Rapid data transfer*
     2 - Flash code output*
```

* Appears alternately

- Operate fault reader taking into account the information on the display:
- Press key 1 for "Rapid data transfer".
- Press keys 0 and 1 for address word "Engine electronics" and confirm entry with Q key.

-> Control unit identification will be indicated on display of fault reader V.A.G 1551:

```
045906019 1.4ltr. R3 EDC 0000 SG 1040
Coding 00002     WSC 00000
```

- 045906019 = Part No. of the control unit (for current control unit version see parts catalogue)
- 1.4 ltr. = Engine capacity

Protected by copyright. Copying for private or commercial purposes, in part or in whole, is not permitted unless authorised by Volkswagen AG. Volkswagen AG does not guarantee or accept any liability with respect to the correctness of information in this document. Copyright by Volkswagen AG.
satelettronica

- R3 = Type of engine (3-Cyl. in-line engine)

- EDC = Injection system (Electronic Diesel Control)
- SG = Gearbox type: manual gearbox
  (AG = automatic gearbox)
- 1040 = Software version
- Coding 00002 coding variant

Coding	For vehicles with
00001	Automatic gearbox
00002	Manual gearbox
00003	Crash shut-off and CAN data bus Manual gearbox and ABS

- WSC xxxxx = Workshop code from V.A.G 1551, of the workshop who carried out the last coding. (If the factory coding has not been changed, WSC 00000 appears)

- Press the ⇒key.

-> Indicated on display:

```
Rapid data transfer      HELP
Select function XX
```

- Further measures see repair procedures.

1.5 - Connecting Vehicle Diagnosis, Testing and Information system VAS 5051 and selecting engine electronics control unit

All functions which could previously be performed with V.A.G 1551/1552 can also be performed with the new tester VAS 5051 in the operating mode vehicle self-diagnosis:

=> Operating instructions for Vehicle Diagnosis, Testing and Information System VAS 5051.

Special tools, workshop equipment, testers, measuring instruments and auxiliary items required

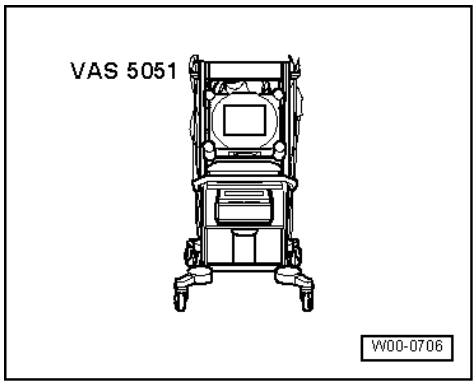

- -> VAS 5051 Vehicle Diagnosis, Testing and Information System

Test conditions

- Fuse SB11 OK.
- The battery voltage must be at least 11.5 V.
- Earth connections on engine and gearbox OK.

satelettronica

Work sequence

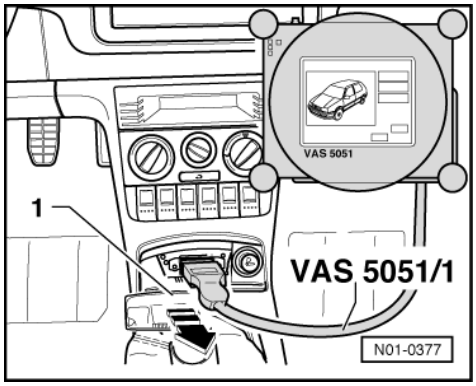

- Connect tester VAS 5051 with diagnosis cable VAS 5051/1 or VAS 5051/3 as follows:
- -> Pull out ashtray -1-.
- Fit diagnosis cable connector onto diagnosis connector.
- Depending upon desired function:
  Switch ignition on
  or
  Start engine => Page 2 , Table "Selectable functions".

Note:

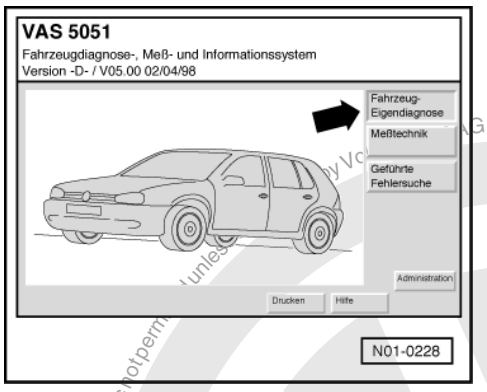

- The display fields will be displayed from top to bottom in functions 04 - Basic settings or 08 - Read data block.
- If the display does not indicate as described in the work sequence:

=> Operating instructions for Vehicle Diagnosis, Testing and Information System VAS 5051.

-> Indicated on display:

Selecting operating mode:

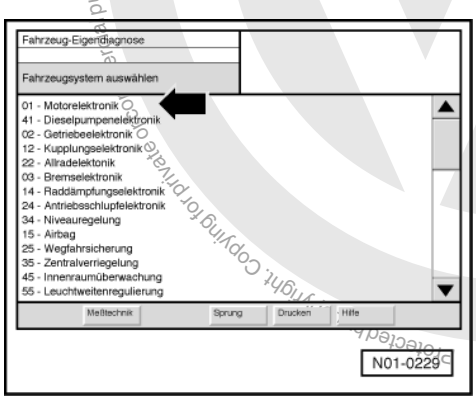

- Press the button on the display for "Vehicle self-diagnosis" -arrow-.

satelettronica

-> Indicated on display:

Selecting vehicle system:

- Press "01 - Engine electronics" on display -arrow-.

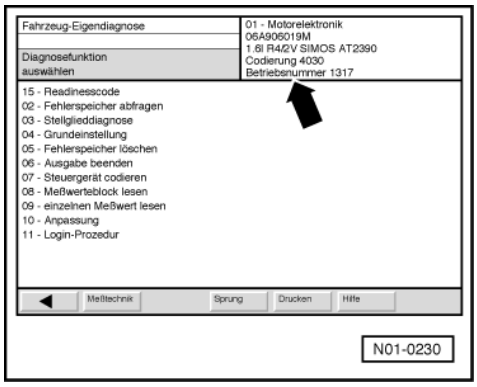

-> The control unit identification and coding -arrow- is shown on display e.g.:

If the coding differs from the vehicle version, then:

- Checking control unit coding => Page 82 ,
  Coding engine control unit

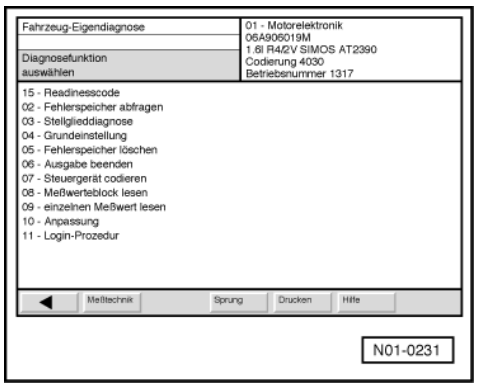

-> Indicated on display:

Selecting diagnosis function:

At this point all diagnosis functions are available.

- Press desired function on display.
- Further measures see repair procedures.

Protected by copyright. Copying for private or commercial purposes, in part or in whole, is not permitted unless authorised by Volkswagen AG. Volkswagen AG does not guarantee or accept any liability with respect to the correctness of information in this document. Copyright by Volkswagen AG.
satelettronica

2 - Fault memory

2.1 - Fault memory

2.2 - Interrogating fault memory

Special tools, workshop equipment, testers, measuring instruments and auxiliary items required

- Fault reader V.A.G 1551 (or vehicle system tester V.A.G 1552) with cable V.A.G 1551/3

Work sequence

Note:

To erase the fault memory, the fault memory must always be interrogated first!

- Connect fault reader V.A.G 1551 (V.A.G 1552) and with the "Address word" 01 select the engine electronics control unit. When doing this the engine should be idling.
  (Connecting fault reader and selecting engine electronics control unit => Page 2 .)

Only when engine does not start:

- Switch ignition on.

- Switch on fault reader printer with the print key. The warning lamp in key must light up.

-> Indicated on display:

```
Rapid data transfer      HELP
Select function XX
```

- Operate fault reader taking into account the information on the display:
- Press keys 0 and 2 for function "Interrogate fault memory" and confirm entry with Q key.

-> The number of faults stored or "No fault recognised!" will be shown on the display.

```
X Faults recognised!
```

If one or more faults are stored:

The stored faults will be displayed and printed out one after the other.

-> After the stored faults have been printed out, the display will show:

```
Rapid data transfer      HELP
Select function XX
```

Note:

The fault reader is required partially for further fault reading therefore leave the engine running and the fault reader connected.

- Eliminate faults printed out as per fault table => Page 11 .
- Erase fault memory afterwards => Page 8

If no fault is stored:

- Press the ⇒key.

-> Indicated on display:

Protected by copyright. Copyright by Volkswagen AG.
Copyright by Volkswagen AG. Volkswagen AG does not guarantee or accept any liability with respect to the correctness of information in this document.
Copying for private or commercial purposes, in part or in whole, is not permitted unless authorised by Volkswagen AG.
satelettronica

```
Rapid data transfer      HELP
Select function XX
```

- Press keys 0 and 6 for the function "End output" and confirm entry with the Q key.

2.3 - Erasing fault memory

Special tools, workshop equipment, testers, measuring instruments and auxiliary items required

◆ Fault reader V.A.G 1551 or vehicle system tester V.A.G 1552 with cable V.A.G 1551/3

Test conditions

• Fault eliminated

Note:

After eliminating faults the fault memory must be interrogated again as follows and then erased.

Work sequence

- Connect fault reader V.A.G 1551 (V.A.G 1552) and select engine electronics control unit with the "Address word" 01. When doing this the engine must be running at idling speed.
  (Connecting fault reader and selecting engine electronics control unit => Page 2 .)

-> Indicated on display:

```
Rapid data transfer      HELP
Select function XX
```

- Press keys 0 and 2 for function "Interrogate fault memory" and confirm entry with Q key.

```
Rapid data transfer      HELP
Select function XX
```

-> Press ⇒key until all faults still stored have appeared and the display reads:
- Press keys 0 and 5 for the function "Erase fault memory" and confirm entry with Q key.

-> Indicated on display:

```
Rapid data transfer
Fault memory is erased!
```

- If the fault memory will not erase there is a fault still in the system and this must be rectified.
- Press the ⇒key.

-> Indicated on display:

```
Rapid data transfer      HELP
Select function XX
```

Automatic test sequence

During test and assembly work faults can be recognised from other control units like e.g. plug disconnected. Therefore on completion the fault memories of all control units must be interrogated and erased. To do this:

- Press key 0 twice for address word "Automatic test sequence" and confirm entry with Q key. The V.A.G 1551 transmits all known address words one after the other.

When a control unit answers with its identification the number of stored faults appears on the display or "No fault recognised".

Protected by copyright. Copying for private or commercial purposes, in part or in whole, is not permitted unless authorised by Volkswagen AG. Volkswagen AG does not guarantee or accept any liability with respect to the correctness of information in this document. Copyright by Volkswagen AG.
satelettronica

Any system faults that are stored will be displayed one after the other and printed out. The V.A.G 1551 will then transmit the next address word.

-> The automatic test sequence has ended when the following appears on the display:

```
V.A.G - SELF-DIAGNOSIS     HELP
1 - Rapid data transfer*
2 - Flash code output*
```

* Appears alternately

- Erase all fault memories and then carry out a road test.
- Interrogate the fault memories of all control units again using the "automatic test sequence". No faults must be stored in fault memory.

If no fault is stored:

- Press the ⇒key.

-> Indicated on display:

```
Rapid data transfer      HELP
Select function XX
```

- Press keys 0 and 6 for the function "End output" and confirm entry with the Q key.

3 - Fault table: Fault codes 00515...01282

3.1 - Fault table: Fault codes 00515...01282

Notes:

- The fault table is listed in ascending order, according to the 5 digit V.A.G- fault code on the left.
- Explanation of the fault types (e.g. "open circuit/short circuit to earth"):

=> Fault reader operating instructions

- If components are indicated as faulty:
  First check the wiring and connectors to these components as well as the system earth connections according to current flow diagram. This is particularly relevant if faults are output as "occurring sporadically" (SP).
- Erase fault memory after rectifying faults.

V.A.G 1551 print out, e.g.:

00515 003

Hall sender -G40

No signal

Sporadic fault

Explanation:

- 00515 = Fault code
- 003 = Fault type as a number
- Hall sender -G62 = Faulty electrical circuit or fault location
- No signal = Fault type as text
- Sporadic faults = Faults that are not always present e.g. loose contact

V.A.G 1551 print-out	Possible causes of fault	Possible effects	Fault remedy

Protected by copyright. Copyright by Volkswagen AG. Volkswagen AG does not guarantee or accept any liability with respect to the correctness of information in this document. Copyright by Volkswagen AG. Reproduction for internal purposes, in part or in whole, is not permitted unless authorised by Volkswagen AG.
satelettronica

00515 Hall sender -G40 No signal	- G40 defective - Sender incorrect or incorrectly secured - Gap between sender and camshaft sprocket not OK - Wiring open circuit or short to earth	- Time to start engine has increased	- Check G40 => Page 73
Signal outside tolerance	- Hub with sender wheel turned on camshaft or loose	- Engine will not start - Engine stops	- Check camshaft and sender wheel position => Repair group 15; Removing and installing cylinder head; Removing and installing toothed belt Removing and installing toothed belt
00671 CCS Switch -E45 Undefined switch position	- E45 defective - Wiring open/short circuit	- Cruise control system switched off	- Check cruise control system =>Page 79

V.A.G 1551 print-out	Possible causes of fault	Possible effects	Fault remedy
00741 Brake pedal monitoring Implausible signal	- Brake light switch (F) defective - Brake pedal switch (F47) defective	- Glow period warning lamp flashes - Brake light defective	- Check F and F47 =>Page 58
01117 Load signal for alternator terminal DF Implausible signal	- Alternator defective - Voltage regulator defective - Wiring open circuit	- Engine preheating not functioning	- Check alternator => Current flow diagrams, Electrical fault finding and Fitting locations binder
01193 Low heat output relay -J359 Short to positive	- Wiring open circuit - Short to positive - Low heat output relay -J359 defective	- Engine preheating not functioning	- Check -J359 =>Page 21 , Final control diagnosis

V.A.G 1551 print-out	Possible causes of fault	Possible effects	Fault remedy
01194 High heat output relay -J360 Short to positive	- Wiring open circuit - Short to positive - High heat output relay -J360 defective	- Engine preheating not functioning	- Check -J360 =>Page 21 , Final control diagnosis
01282 Intake manifold flap change-over valve -N239 Open circuit/short to earth	- Wiring open circuit - Intake manifold change-over valve defective	- Harder engine stop jolts	- Check N239 =>Page 21 , final control diagnosis

satelettronica

Short to positive	- Short to positive		

Protected by copyright. Copyright for private and commercial purposes, in whole or in part, is not permitted unless authorised by Volkswagen AG. Volkswagen AG does not guarantee or accept any liability with respect to the correctness of information in this document. Copyright by Volkswagen AG.

4 - Fault table: Fault codes 16485...18076

4.1 - Fault table: Fault codes 16485...18076

Note:

In the following table, new fault codes which describe fault causes more precisely than before have been listed in place of the familiar five-digit V.A.G fault codes. The fault text has not changed greatly. In addition a new type of fault code, the so called P codes e.g. P0101, is listed and positioned next to the existing codes. These P codes have no significance at present, but will be required by self-diagnosis systems in the future.

V.A.G 1551 print out, e.g.:

17664 P1256 030

Coolant temperature sender -G62

Open circuit/short to positive

Sporadic fault

Explanation:

- 16502 = Fault code
- P0118 = Additional fault code
- 035 = Fault type as a number
- Coolant temperature sender -G62 = Faulty current path or fault location
- Open circuit/short to positive = Fault type as text
- Sporadic faults = Faults that are not always present e.g. loose contact

V.A.G 1551 print-out	Possible causes of fault	Possible effects	Fault remedy
16485P0101 Air mass meter -G70 Implausible signal	- G70 defective - Wiring open circuit or short to earth	- Reduced output - Black smoke	- Check air mass meter => Page 65
16685P0301 Misfiring recognised No. 1 Cyl.	- No combustion in No. 1 Cyl. - No compression pressure	- Reduced output - Engine runs rough - Increased emission figures	- Check compression pressure => Repair group 15; Removing and installing cylinder head; Check compression pressure Check compression pressure

V.A.G 1551 print-out	Possible causes of fault	Possible effects	Fault remedy
16686P0302 Misfiring recognised			

satelettronica

No. 2 Cyl.	- No combustion in No. 2 Cyl. - No compression pressure	- Reduced output - Engine runs rough - Increased emission figures	- Check compression pressure => Repair group 15; Removing and installing cylinder head; Checking compression pressure Checking compression pressure
16687P0303 Misfiring recognised No. 3 Cyl.	- No combustion in No. 3 Cyl. - No compression pressure	- Reduced output - Engine runs rough - Increased emission figures	- Check compression pressure => Repair group 15; Removing and installing cylinder head; Checking compression pressure Checking compression pressure

V.A.G 1551 print-out	Possible causes of fault	Possible effects	Fault remedy
16705P0321 Engine speed sender -G28 Implausible signal	- G28 defective - Wiring open circuit or short circuit - Gap speed sender/sender wheel too large - Metal swarf on G28 - G28 loose	- Engine stalls - Engine runs rough - Glow period warning lamp flashes - Increased emission figures - Rev. counter no display	- Check G28 =>Page 53
16706P0322 Engine speed sender -G28 No signal	- G28 defective - Wiring open circuit or short circuit	- Engine will not start - Engine stops - Glow period warning lamp flashes - Rev. counter no display	- Check G28 =>Page 53

V.A.G 1551 print-out	Possible causes of fault	Possible effects	Fault remedy
16725P0341 Camshaft position sender -G40 Implausible signal	- G40 defective - Sender incorrect or incorrectly secured - Gap between sender and camshaft sprocket not OK - Wiring open circuit or short to earth	- Time to start engine has increased	- Check G40 => Page 73
	- Hub with sender wheel turned on camshaft or loose	- Engine will not start - Engine stops	- Check camshaft and sender wheel position => Repair group 15; Removing and installing cylinder head; Removing and installing toothed belt Removing and installing toothed belt

V.A.G 1551 print-out	Possible causes of fault	Possible effects	Fault remedy
16885P0501 Road speed signal			

Protected by copyright. Copyright by Volkswagen AG. Volkswagen AG does not guarantee or accept any liability with respect to the correctness of information in this document. Copyright by Volkswagen AG. Reproduction, in part or whole, is not permitted unless authorised by Volkswagen AG. Volkswagen AG does not guarantee or accept any liability with respect to the correctness of information in this document. Copyright by Volkswagen AG.
satelettronica

Implausible signal	- No signal from speedometer sender (G22)	- Speedometer display not OK. - Cruise control system switched off - Vehicle jerks when gear is selected - Air conditioner is switched off	- Check signal from G22 =>Page 74
16944P0560 Voltage supply Implausible signal	- Current supply relay terminal 30 (J317) defective - Relay sticks (sporadically)	- Engine will not start - Various running problems including engine will not start	- Check Diesel direct injection system control unit voltage supply =>Page 52

V.A.G 1551 print-out	Possible causes of fault	Possible effects	Fault remedy
16946P0562 Voltage supply Voltage too low	- Voltage supply below 4 V	- Engine will not start - Engine running problems or engine stops	- Check Diesel direct injection control unit voltage supply =>Page 52
16947P0563 Voltage supply Voltage too high	- Voltage supply above 20 V		
16989P0605 Control unit defective	- Control unit internals defective	- Engine running problems - Engine stops	- Renew engine control unit =>Page 81

V.A.G 1551 print-out	Possible causes of fault	Possible effects	Fault remedy
17552P1144 Air mass meter -G70 Open circuit/short to earth	- G70 defective - Wiring open circuit or short to earth	- Reduced output - Black smoke	- Check air mass meter => Page 65
17553P1145 Air mass meter -G70 Short to positive	- G70 defective - Wiring open circuit or short to positive	- Reduced output - Black smoke	- Check air mass meter => Page 65
17554P1146 Air mass meter -G70 Voltage supply	- Operating voltage to high or too low - Wiring open circuit	- Reduced output - Black smoke	- Check air mass meter => Page 65

V.A.G 1551 print-out	Possible causes of fault	Possible effects	Fault remedy
17563P1155 Intake manifold pressure sender -G71 Short to positive	- Short to positive - G71 defective	- Reduced output	- Check intake manifold pressure sender =>Page 54
17564P1156			

Protected by copyright. Copyright by Volkswagen AG. Volkswagen AG does not guarantee or accept any liability with respect to the correctness of information in this document. Copyright by Volkswagen AG, unless authorised by Volkswagen AG, is not to be given to third parties or made available for commercial purposes, in part or in whole.
satelettronica

V.A.G 1551 print-out	Possible causes of fault	Possible effects	Fault remedy
Intake manifold pressure sender -G71 Open circuit/short to earth	- G71 defective - Wiring open circuit or short to earth	- Reduced output - Increased emission figures	- Check intake manifold pressure sender =>Page 54
17565P1157 Intake manifold pressure sender -G71 Voltage supply	- G71 defective - Wiring open circuit or short circuit	- Reduced output - Increased emission figures	- Check intake manifold pressure sender =>Page 54

V.A.G 1551 print-out	Possible causes of fault	Possible effects	Fault remedy
17568P1160 Intake manifold temperature sender -G72 Short to earth	- G72 defective - Wiring short to earth	- Goes to predetermined value 135.9 °C - Engine preheating not functioning	- Check G72 =>Page 61
17569P1161 Intake manifold temperature sender -G72 Open circuit/short to positive	- G72 defective - Wiring open circuit or short to positive	- Goes to predetermined value 135.9 °C - Engine preheating not functioning	- Check G72 =>Page 61

V.A.G 1551 print-out	Possible causes of fault	Possible effects	Fault remedy
17570P1162 Fuel temperature sender -G81 Short to earth	- G81 defective - Wiring short to earth	- Increased emission figures	- Check G81 => Page 63
17571P1163 Fuel temperature sender -G81 Open circuit/short to positive	- G81 defective - Wiring open circuit or short to positive	- Increased emission figures	- Check G81 => Page 63

V.A.G 1551 print-out	Possible causes of fault	Possible effects	Fault remedy
17663P1255 Coolant temperature sender -G62 Short to earth	- G62 defective - Wiring short to earth	- Black smoke when starting - Glow period is always approx. 20 seconds - Engine preheating not functioning	- Check G62 =>Page 56
17664P1256 Coolant temperature sender -G62			

Protected by copyright. Copyright by Volkswagen AG. Volkswagen AG does not guarantee or accept any liability with respect to the correctness of information in this document. Copyright by Volkswagen AG. Reproduction, in part or in whole, is not permitted unless authorised by Volkswagen AG for commercial purposes, in part or in whole, is not permitted unless authorised by Volkswagen AG.
satelettronica

V.A.G 1551 print-out	Possible causes of fault	Possible effects	Fault remedy
Open circuit/short to positive	- G62 defective - Wiring open circuit or short to positive	- Black smoke when starting - Glow period is always approx. 20 seconds - Engine preheating not functioning	- Check G62 =>Page 56

V.A.G 1551 print-out	Possible causes of fault	Possible effects	Fault remedy
17668P1260 No. 1 Cyl. unit injector valve - N240 Implausible signal	- No control of unit injector valve	- Various running problems - Engine runs rough - Reduced output - Increased emission figures	- Check unit injector valves =>Page 70
17669P1261 No. 1 Cyl. unit injector valve - N240 Control limit surpassed	- Control period too long - Transfer resistance	- Various running problems - Engine runs rough - Reduced output - Increased emission figures	- Check unit injector valves =>Page 70

V.A.G 1551 print-out	Possible causes of fault	Possible effects	Fault remedy
17670P1262 No. 1 Cyl. unit injector valve - N240 Control limit not reached	- Control period too short - Shortage of fuel - Air in fuel system	- Various running problems - Engine runs rough - Reduced output - Increased emission figures	- Check unit injector valves =>Page 70 Check fuel supply system => Repair group 20; Removing and installing parts of fuel supply system;
17671P1263 No. 2 Cyl. unit injector valve - N241 Implausible signal	- No control of unit injector valve	- Various running problems - Engine runs rough - Reduced output - Increased emission figures	- Check unit injector valves =>Page 70

V.A.G 1551 print-out	Possible causes of fault	Possible effects	Fault remedy
17672P1264 No. 2 Cyl. unit injector valve - N241			

Protected by copyright. Copying for private or commercial purposes, in part or in whole, is not permitted unless authorised by Volkswagen AG. Volkswagen AG does not guarantee or accept any liability with respect to the correctness of information in this document. Copyright by Volkswagen AG.
satelettronica

Control limit surpassed	- Control period too long - Transfer resistance	- Various running problems - Engine runs rough - Reduced output - Increased emission figures	- Check unit injector valves =>Page 70
17673P1265 No. 2 Cyl. unit injector valve - N241 Control limit not reached	- Control period too short - Shortage of fuel - Air in fuel system	- Various running problems - Engine runs rough - Reduced output - Increased emission figures	- Check unit injector valves =>Page 70 Check fuel supply system => Repair group 20; Removing and installing parts of fuel supply system;

V.A.G 1551 print-out	Possible causes of fault	Possible effects	Fault remedy
17674P1266 No. 3 Cyl. unit injector valve - N242 Implausible signal	- No control of unit injector valve	- Various running problems - Engine runs rough - Reduced output - Increased emission figures	- Check unit injector valves =>Page 70
17675P1267 No. 3 Cyl. unit injector valve - N242 Control limit surpassed	- Control period too long - Transfer resistance	- Various running problems - Engine runs rough - Reduced output - Increased emission figures	- Check unit injector valves =>Page 70

V.A.G 1551 print-out	Possible causes of fault	Possible effects	Fault remedy
17676P1268 No. 3 Cyl. unit injector valve -N242 Control limit not reached	- Control period too short - Shortage of fuel - Air in fuel system	- Various running problems - Engine runs rough - Reduced output - Increased emission figures	- Check unit injector valves =>Page 70 Check fuel supply system => Repair group. 20; Removing and installing parts of fuel supply system;
17795P1387 Control unit defective	- Control unit internals defective	- Engine running problems - Engine stops	- Renew engine control unit =>Page 81
17810P1402 Exhaust gas recirculation valve -N18			

Copyright by Volkswagen AG. Volkswagen AG does not guarantee or accept any liability with respect to the correctness of information in this document. Copying for private or commercial purposes, in part or in whole, is not permitted unless authorised by Volkswagen AG.
Please buy copy
satelettronica

Short to positive	- Short to positive	- No exhaust gas recirculation	- Check N18 =>Page 21 , Final control diagnosis

V.A.G 1551 print-out	Possible causes of fault	Possible effects	Fault remedy
17849P1441 Exhaust gas recirculation valve - N18 Open circuit/short to earth	- Wiring open circuit - Exhaust gas recirculation valve defective	- No exhaust gas recirculation	- Check N18 =>Page 21 , Final control diagnosis
	- Short to earth	- Too much exhaust gas recirculation - Reduced output - Black smoke	
17948P1540 Road speed signal Signal too large	- Road speed more than 260 km/h - Dash panel insert defective	- Cruise control system not OK - Cruise control system switched off - Vehicle jerks when selecting gear - Air conditioner is switched off	- Check signal from G22 =>Page 74

V.A.G 1551 print-out	Possible causes of fault	Possible effects	Fault remedy
17954P1546 Charge pressure control solenoid valve -N75 Short to positive	- Short to positive	- Reduced output - Charge pressure too low	- Check N75 =>Page 21 , Final control diagnosis
17957P1549 Charge pressure control solenoid valve -N75 Open circuit/short to earth	- Wiring open circuit - Solenoid valve defective	- Reduced output - Charge pressure too low	- Check N75 =>Page 21 , Final control diagnosis
	- Short to earth	- Reduced output - Charge pressure too high	

V.A.G 1551 print-out	Possible causes of fault	Possible effects	Fault remedy
17958P1550 Charge pressure Control difference	- Charge pressure control solenoid valve (N75) defective - Hose connections interchanged, not connected - Leaks between turbocharger and engine (routing through ducting/cooler) - Turbocharger defective	- Reduced output	- Check N75 =>Page 21 , final control diagnosis Check charge pressure control => Repair group 21; Checking charge pressure control
17978P1570			

satelettronica
Copyright by Volkswagen AG. Volkswagen AG does not guarantee or accept any liability with respect to the correctness of information in this document. Copying for private or commercial purposes, in part or in whole, is not permitted unless authorised by Volkswagen AG. Volkswagen AG. Protected by copyright. Copying for private or commercial purposes, in part or in whole, is not permitted unless authorised by Volkswagen AG.

V.A.G 1551 print-out	Possible causes of fault	Possible effects	Fault remedy
Engine control unit blocked	- Start attempted with a non-authorised key. - Attempted manipulation - Short in communication wire - Fault in immobilizer system - Immobilizer control unit defective/missing - Engine control unit has been replaced and not matched to the immobilizer.	- Engine starts briefly and then stops again - Glow period warning lamp flashes	- Match engine control unit to electronic immobilizer => Page 83 Check electronic immobilizer: => Electrical system; Repair group 01; Immobilizer self-diagnosis Immobilizer self-diagnosis

V.A.G 1551 print-out	Possible causes of fault	Possible effects	Fault remedy
18008P1600 Voltage supply terminal 15 Implausible signal	- No current supply when ignition is on (terminal 15)	- Various running problems including engine will not start	- Check voltage supply for terminal 15 => Current flow diagrams, Electrical fault finding and Fitting locations binder
18020P1612 Control unit incorrectly coded	- Invalid control unit coding	- Glow period warning lamp flashes	- Code control unit =>Page 82

V.A.G 1551 print-out	Possible causes of fault	Possible effects	Fault remedy
18024P1616 Glow period warning lamp -K29 Short to positive	- Short to positive	- Glow period warning lamp not functioning	- Check glow period warning lamp (K29) =>Page 21 , Final control diagnosis
18025P1617 Glow period warning lamp -K29 Open circuit/short to earth	- Wiring open circuit - Bulb defective	- Glow period warning lamp not functioning	- Check glow period warning lamp (K29) =>Page 21 , Final control diagnosis
	- Short to earth	- Glow period warning lamp permanently on	

V.A.G 1551 print-out	Possible causes of fault	Possible effects	Fault remedy
18026P1618 Glow plug relay -J52 Short to positive	- Wiring short to positive - J52 defective	- No glow period - Poor cold starting - Glow period warning lamp (K29) flashes	- Check J52 =>Page 21 , Final control diagnosis
18027P1619 Glow plug relay -J52 Open circuit/short to earth	- Wiring open circuit or short to earth - J52 defective	- No glow period - Poor cold starting - Glow period warning lamp (K29) flashes	- Check J52 => Page 21 , Final control diagnosis
18034P1626			

satelettronica

V.A.G 1551 print-out	Possible causes of fault	Possible effects	Fault remedy
Drive train data bus Communication from gearbox control unit missing	- Fault in data wire to gearbox control unit	- Driving characteristics (selector jolts, load change jolts)	- Check data bus => Page 81

V.A.G 1551 print-out	Possible causes of fault	Possible effects	Fault remedy
18039P1631 Accelerator position sender -G79 Signal too large	- G79 defective	- Increased idling speed	- Check G79 => Repair group 20; Removing and installing parts of fuel supply system; Checking accelerator position sender Checking accelerator position sender
18040P1632 Accelerator position sender -G79 Voltage supply	- Operating voltage too high or too low - Wiring open circuit	- Glow period warning lamp flashes - Increased idling speed	- Check G79 => Repair group 20; Removing and installing parts of fuel supply system; Checking accelerator position sender Checking accelerator position sender

V.A.G 1551 print-out	Possible causes of fault	Possible effects	Fault remedy
18047P1639 Accelerator position sender 1/2 -G79+G185 Implausible signal	- G79 defective	- Increased idling speed	- Check G79 => Rep.-Gr. 20; Removing and installing parts of fuel supply system; Checking accelerator position Checking accelerator position => sender
18048P1640 Control unit defective	- Control unit internals defective	- Engine running problems - Engine stops	- Renew engine control unit =>Page 81

V.A.G 1551 print-out	Possible causes of fault	Possible effects	Fault remedy
18056P1648 Drive train data bus Defective	- Fault in data wiring to gearbox or ABS control unit - Fault in system: Automatic gearbox or ABS	- Various running problems (jerk when shifting, load change jolts)	- Check data bus =>Page 81
18057P1649 Drive train data bus			

satelettronica

V.A.G 1551 print-out	Possible causes of fault	Possible effects	Fault remedy
No information from ABS control unit	- Fault in data wiring to ABS control unit	- Various running problems (jerk when shifting, load change jolts)	- Check data bus => Page 81

V.A.G 1551 print-out	Possible causes of fault	Possible effects	Fault remedy
18071P1663 Unit injector valve activation Short to positive	- Short to positive in engine wiring harness - Short to positive in engine control unit	- Engine stops - (permanent fault) - Engine misfiring - (sporadic fault)	- Check unit injector valve activation =>Page 70
18072P1664 Unit injector valve activation Electrical fault in current circuit	- Wiring open circuit or short to earth in engine wiring harness	- Engine stops - (permanent fault) - Engine misfiring - (sporadic fault)	- Check unit injector valve activation =>Page 70
18073P1665 Unit injector valve activation Mechanical fault	- Unit injector defective mechanically	- Engine misfiring - Engine stops	- Renew unit injector =>Page 48

V.A.G 1551 print-out	Possible causes of fault	Possible effects	Fault remedy
18074P1666 No. 1 Cyl. unit injector valve - N240 Electrical fault in current circuit	- Wiring open circuit or short to earth in engine wiring harness	- Various running problems - Engine runs rough - Reduced output - Increased emission figures	- Check unit injector valves =>Page 70
18075P1667 No. 2 Cyl. unit injector valve - N241 Electrical fault in current circuit			
18076P1668 No. 3 Cyl. unit injector valve - N242 Electrical fault in current circuit	- Wiring open circuit or short to earth in engine wiring harness	- Various running problems - Engine runs rough - Reduced output - Increased emission figures	- Check unit injector valves =>Page 70

Protected by copyright. Copying for private or commercial purposes, in part or in whole, is not permitted unless authorised by Volkswagen AG. Volkswagen AG does not guarantee or accept any liability with respect to the correctness of information in this document. Copyright by Volkswagen AG.
satelettronica

5 - Final control diagnosis

5.1 - Final control diagnosis

5.2 - Performing final control diagnosis

Special tools, workshop equipment, testers, measuring instruments and auxiliary items required

- Fault reader V.A.G 1551 with cable V.A.G 1551/3

Test requirements for vehicles with air conditioning system

- Vehicle at room temperature (warmer than + 15 °C)
- Air conditioning system switched on
- Select lowest temperature and highest blower speed

The final control diagnosis activates the following components in the stated sequence:

1. Exhaust gas recirculation valve (N18)

2. Conditioner compressor interruption

3. Charge pressure control solenoid valve (N75)

4. Intake manifold flap change-over valve (N239)

5. Glow period warning lamp (K29)

6. Glow plug relay (J52)

7. Low heater output relay (J359)

8. High heater output relay (J360)

Notes:

- Activation of individual control elements is limited to 30 seconds but can be stopped at any time by pressing the ⇒button.
- The ignition must be switched off before repeating the final control diagnosis.

Work sequence

- Connect fault reader V.A.G 1551 (V.A.G 1552) and select engine electronics control unit with the "Address word" 01. When doing this the engine must be running at idling speed.
  (Connecting fault reader and selecting engine electronics control unit => Page 2 .)

-> Indicated on display:

```
Rapid data transfer      HELP
Select function XX
```

- Operate fault reader taking into account the information on the display:
- Press keys 0 and 3 for the function "Final control diagnosis".

-> Indicated on display:

```
Rapid data transfer      Q
03 Final control diagnosis
```

- Confirm input with Q key.

Protected by copyright. Copying for private or commercial purposes, in whole or in part, is not permitted unless authorised by Volkswagen AG. Volkswagen AG does not guarantee or accept any liability with respect to the correctness of information in this document. Copyright by Volkswagen AG.
satelettronica

-> Indicated on display:

```
Final control diagnosis
Exhaust gas recirculation valve -N18
```

The valve must click.

Note:

Because the clicking of the valve is not audible over the engine noise, it can only be checked by feel.

Valve does not click:

- Check exhaust gas recirculation system

=> Repair group 26; Exhaust gas recirculation system; Checking exhaust gas recirculation system Exhaust gas recirculation system Checking exhaust gas recirculation system

- Press the ⇒key.

-> Indicated on display:

```
Final control diagnosis
Conditioner compressor interruption
```

Air conditioner compressor switch-off is checked.
The test step is also called on vehicles without air conditioner system.
The conditioner compressor must stop within 5 seconds (visual check) then start approx. every 5 seconds and then stop.

If the conditioner compressor is not switched off:

- Check signals from/to air conditioning system
  => Page 76
- Press the ⇒key.

-> Indicated on display:

```
Final control diagnosis
Charge pressure control solenoid valve -
N75
```

The solenoid valve must click.

Note:

The clicking of the valve is difficult to hear and is therefore best checked by touch.

If the solenoid valve does not click:

- Check charge pressure control solenoid valve (N75)

=> Repair group 21; Checking charge pressure control. Checking charge pressure control.

=>

- Press the ⇒key.

-> Indicated on display:

```
Final control diagnosis
Intake manifold flap changeover valve -
N239
```

The engine must stop.

Protected by copyright. Copyright by Volkswagen AG.
Copyright by Volkswagen AG. Volkswagen AG does not guarantee or accept any liability with respect to the correctness of information in this document. Copyright by Volkswagen AG.
satelettronica

If the engine does not stop:

- Check intake manifold flap change-over
  =>Page 68
- Press the ⇒key.

-> Indicated on display:

```
Final control diagnosis
Glow period warning lamp -K29
```

The control lamp must flash.

Control lamp does not flash:

- Check glow period warning lamp:

=> Current flow diagrams, Electrical fault finding and Fitting locations binder

- Press the ⇒key.

-> Indicated on display:

```
Final control diagnosis
Glow plug relay -J52
```

The relay must click.

If the relay does not click:

- Check glow plug relay:

=> Current flow diagrams, Electrical fault finding and Fitting locations binder

- Press the ⇒key.

-> Indicated on display:

```
Final control diagnosis
Low heater output relay -J359
```

The relay must click.

If the relay does not click:

- Check low heater output relay:

=> Current flow diagrams, Electrical fault finding and Fitting locations binder

- Press the ⇒key.

-> Indicated on display:

```
Final control diagnosis
High heater output relay -J360
```

The relay must click.
Switching on and off the relay can also be observed as the interior light becomes brighter and darker as a result of the glow plug high power consumption.

If the relay does not click:

- Check high heat output relay:

=> Current flow diagrams, Electrical fault finding and Fitting locations binder

Protected by copyright. Copying for private or commercial purposes, in part or in whole, is not permitted unless authorised by Volkswagen AG. Volkswagen AG does not guarantee or accept any liability with respect to the correctness of information in this document. Copyright by Volkswagen AG.
satelettronica

- Press the ⇒key.

-> Indicated on display:

```
Rapid data transfer      HELP
Select function XX
```

- Press keys 0 and 6 for the function "End output" and confirm entry with the Q key.
- Switch off ignition.

Now the final control test is concluded.

6 - Measured value blocks

6.1 - Measured value blocks

6.2 - Safety precautions

Observe following if test and measuring instruments are required during a test drive:

- Test and measuring instruments must be secured to rear seat and operated by a 2nd person from this location.

  If test and measuring instruments are operated from front passenger's seat and the vehicle is involved in an accident, there is a possibility that the person sitting in this seat may receive serious injuries when the airbag is triggered.

6.3 - Reading measured value block

Special tools, workshop equipment, testers, measuring instruments and auxiliary items required

- Fault reader V.A.G 1551 with cable V.A.G 1551/3

Test conditions

- Coolant temperature must be at least 80 °C.
- All electrical consumers like e.g. rear window heating must be switched off.

- If the vehicle is equipped with an air conditioner, this must be switched off.
- No faults must be stored in fault memory
  => Page 7 , interrogating fault memory

Work sequence

- Connect fault reader V.A.G 1551 (V.A.G 1552) and select engine electronics control unit with the "Address word" 01. When doing this the engine must be running at idling speed.
  (Connecting fault reader and selecting engine electronics control unit => Page 2 .)

-> Indicated on display:

```
Rapid data transfer      HELP
Select function XX
```

- Press keys 0 and 8 for the function "Read measured value block" and confirm entry with Q key.

-> Indicated on display:

Protected by copyright. Copyright by Volkswagen AG. Volkswagen AG does not guarantee or accept any liability with respect to the correctness of information in this document. Copyright by Volkswagen AG. Commercial purposes, in part or in whole, is not permitted unless authorised by Volkswagen AG.
satelettronica

```
Read measured value block
Enter display group number XXX
```

Note:

The display group number 001 is an example, to illustrate the sequence.

- Press keys 0, 0 and 1 for "Display group number 1" and confirm entry with Q key.

-> Indicated on display:
(1...4 = Display zones)

```
Read measured value block     1
     1     2     3     4
```

- Press ⇒key.

-> Indicated on display:

```
Rapid data transfer     HELP
Select function XX
```

- Press keys 0 and 6 for the function "End output" and confirm entry with the Q key.

Note:

To change to another display group proceed as follows:

Display group	V.A.G 1551	V.A.G 1552
Higher	Press key 3	Press ↑key
Lower	Press key 1	Press ↓key
Skip	Press key C	Press key C

6.4 - Measured values at idling speed

Display group 000 (decimal value displayed)			
▪ Engine running at idling speed			
Read measured value block 0 (x x x x x x x x x x)	◂ Indicated on display		
	◂ Display zones	Specification	Corresponds to
10	Air mass1)	60...96	200...320 mg/H
9	Fuel temperature	85...178	20...85°C
8	Intake manifold temperature	190...51	5...100°C
7	Coolant temperature	80...36	80...110°C
6	Atmospheric pressure	181...222	900...1100 mbar
5	Intake manifold pressure	88...108	900...1100 mbar
4	Injected quantity	11...33	3.0...9.0 mg/H
3	Accelerator pedal position	0	0 %
2	Commencement of injection	117...97	3°...9° BTDC
1	Engine speed	41...45	860..940 rpm

1) The measured values are only valid when the exhaust gas recirculation (EGR) is switched on. When the engine is idling the EGR is switched off after running for a predetermined period, therefore give burst on throttle or restart engine.

Protected by copyright. Volkswagen AG. Volkswagen AG does not guarantee or accept any liability with respect to the correctness of information. Copying for private or commercial purposes, in part or in whole, is not permitted unless authorised by Volkswagen AG.
satelettronica

Display group 001 at idling speed (engine warm, coolant temperature not below 80 °C)

Display group 001 -Injected quantity-						
Read measured value block 1			⇒	◂ Indicated on display		
xxxx rpm	xx.x mg/H	x.xx° CA	xxx.x °C			
1	2	3	4	◂ Display zones	Specification	Evaluation
				Coolant temperature	80...110 °C	---
			Injection period (specification)		4...7° CA	---
		Injection quantity			3.0...9.0 mg/H	=> Page 26
	Engine speed				860...940 rpm	---

Evaluation: Injected quantity display

V.A.G 1551 display	Possible fault cause	Fault elimination
Below 3.0 mg/H	- Unit injectors defective	- Renew unit injectors => Page 48
Above 9.0 mg/H	- Engine too cold - Fuel deficiency - Air in fuel system - Unit injectors defective	- Run engine at increased speed to warm up and repeat check Check fuel supply => Repair group 20; Removing and installing parts of fuel supply system - Renew unit injectors =>Page 48

Display group 002 at idling speed (engine warm, coolant temperature not below 80 °C)

Display group 002 -idling speed-						
Read measured value block 2			⇒	◂ Indicated on display		
xxxx rpm	xxx.x %	xxx	xxx.x °C			
1	2	3	4	◂ Display zones	Specification	Evaluation
				Coolant temperature	80...110 °C	---
			Operating condition		010	=> Page 26
		Accelerator pedal position			0 %	=> Page 26
	Engine speed				860...940 rpm	---

Evaluation: Accelerator pedal position display

V.A.G 1551 display	Possible fault cause	Fault elimination
1...100 %	- Accelerator position sender -G79 defective	- Check -G79 => Repair group 20; Removing and installing parts of fuel supply system; Checking accelerator position sender Checking accelerator position sender
	- Wiring open circuit to G79	

Evaluation: Operating condition display

Significance of figures in 3-digit number block for engine operating condition:

satelettronica

Significance when display = 1			
x	x	x	Engine operating condition
		1	Air conditioner compressor switched on
	1		Idling switch closed
1			Increased idling speed because air conditioner is switched on

Display group 003 at idling speed (engine warm, coolant temperature not below 80 °C)

Display group 003 -Exhaust gas recirculation1)-						
Read measured value block 3 ⇒ xxxx rpm xxx mg/H xxx mg/H xxx %				◂ Indicated on display		
1	2	3	4	◂ Display zones	Specification	Evaluation
				Duty cycle from exhaust gas recirculation valve	30...80 %	---
				Air mass drawn in (actual)	200...320 mg/H	=> Page 27
				Air mass drawn in (specification)	220...300 mg/H	=> Page 27
				Engine speed	860...940 rpm	---

1) The measured values are only valid when the exhaust gas recirculation (EGR) is switched on. When the engine is idling the EGR is switched off after running for a predetermined period, therefore give burst on throttle or restart engine.

Evaluation: Air mass drawn in (specified) display

V.A.G 1551 display	Possible fault cause	Fault elimination
Above 300 mg/H	- Engine too cold	- Run engine at increased speed to warm up and repeat check.

Evaluation: Air mass drawn in (actual) display

V.A.G 1551 display	Possible fault cause	Fault elimination
Below 200 mg/H	- Excessive exhaust gas recirculation	- Check exhaust gas recirculation => Repair group 26; Exhaust gas recirculation system; Checking exhaust gas recirculation Checking exhaust gas recirculation
	- Unmetered air	- Check intake air system for leaks.
Above 320 mg/H	- Engine too cold	- Run engine at increased speed to warm up and repeat check.
	- Insufficient exhaust gas recirculation	- Engine running for a long time at idling speed, give burst on throttle.
	- Air mass meter -G70 defective	- Check air mass meter function => Page 65 If a fault is present, the measured value block indicates a constant air mass value of approx. 539 mg/H over the complete rpm and load range.

Display group 004 at idling speed (engine warm, coolant temperature not below 80 °C)

Display group 004 -Unit injector valve activation-		
Read measured value block 4	⇒	◂ Indicated on display

satelettronica

xxxx rpm	xx.x° BTDC	xx.x°CA	xx.x°CA			
1	2	3	4	◂ Display zones	Specification	Evaluation
				Synchronisation angle	-6...+6 ° CA	=> Page 28
			Injection period (specification)		4...7° CA	---
		Commencement of injection (specified)			3°...9°BTDC	=> Page 28
	Engine speed				860...940 rpm	---

Evaluation: Commencement of injection (specified) display

V.A.G 1551 display	Possible fault cause	Fault elimination
Earlier than 3°BTDC	- Engine too cold	- Run engine at increased speed to warm up and repeat check.

Evaluation: Synchronisation angle display

V.A.G 1551 display	Possible fault cause	Fault elimination
Earlier than + 6° CA or later than - 6° CA	- G40 defective - Sender incorrect or incorrectly secured - Gap between sender and camshaft sprocket not OK. - Wiring open circuit or short to earth	- Check G40 => Page 73
	- Hub with sender wheel turned on camshaft or loose	- Check camshaft and sender wheel position => Repair group 15; Removing and installing cylinder head; Removing and installing toothed belt Removing and installing toothed belt

Display group 005

The values displayed are not relevant for fault finding within the service department.

Display group 005 -Starting conditions-						
Read measured value block 5			⇒	◂ Indicated on display		
xxxx rpm	xx.x mg/H	xx.x ° B/ATDC	xxx.x °C			
1	2	3	4	◂ Display zones	Specification	Evaluation
				Coolant temperature	---	---
			Starting synchronisation		---	---
		Starting quantity			---	---
	Engine speed				---	---

Display group 006 at idling

Display group 006 -Switch positions-						
Read measured value block 6			⇒	◂ Indicated on display		
xxx km/h	xxx	xxx.x %	xxx			
1	2	3	4	◂ Display zones	Specification	Evaluation
				Cruise control system1)	---	---
			Accelerator pedal position		0 %	=> Page 26
		Switch positions				=> Page 29

satelettronica

Speed	---	---

1) 0 = Vehicles with cruise control system, cruise control system switched off

1 = Vehicles with cruise control system, cruise control system switched on

255 = Vehicles without cruise control system

Evaluation: Switch positions display

Significance of figures in 3-digit number block for switch positions:

Significance when display = 1			
x	x	x	Brake pedal monitor
		1	Brake light switch -F- closed
	1		Brake pedal switch -F-47- open
1			Clutch pedal switch -F36- open

Display group 007 with ignition switched on (engine cold and not running)

Display group 007 -Temperatures-						
Read measured value block 7 ⇒				◂ Indicated on display		
xxx.x °C	xxx %	xxx.x °C	xxx.x °C			
1	2	3	4	◂ Display zones	Specification	Evaluation
				Coolant temperature	Approx. ambient temperature1)	=> Page 30
				Intake manifold temperature	Approx. ambient temperature1)	=> Page 29
				Fuel cooling status	Off: 0 %	---
				Fuel temperature	Approx. ambient temperature1)	=> Page 29

1) Details of temperature specifications are not possible. When the engine is cold the fuel, intake air and coolant temperatures must equate approximately to ambient temperature. If a temperature deviates noticeably then the relevant sender must be checked.

Evaluation: Fuel temperature display

V.A.G 1551 display	Possible fault cause	Fault elimination
- 5.4 °C	- Short circuit or fuel temperature sender -G81 defective	- Check -G81 => Page 63 If a fault is present the measured value block indicates a fuel temperature of -5.4 °C

Evaluation: Intake manifold temperature display

V.A.G 1551 display	Possible fault cause	Fault elimination
Approx.135.9 °C	- Open circuit or intake manifold temperature sender -G72	- Check G72 => Page 61 If a fault is present, the measured value block indicates a constant intake manifold temperature of approx.135.9 °C

Volkswagen AG. Volkswagen AG does not guarantee or accept any liability with respect to the correctness of information in this document. Copyright by Volkswagen AG. Proprietary and copyright. Copying for private or commercial purposes, in part or in whole, not permitted unless authorised by Volkswagen AG.
satelettronica

Protected by copyright. Copying for private or commercial purposes, in part or in whole, is not permitted unless authorised by Volkswagen AG. Volkswagen AG does not guarantee or accept any liability with respect to the correctness of information in this document. Copyright by Volkswagen AG.

Evaluation: Coolant temperature display

V.A.G 1551 display	Possible fault cause	Fault elimination
Large deviation from ambient temperature	- Short circuit or coolant temperature sender -G62 defective	- Check G62 => Page 56 If a fault is present the fuel temperature is alternatively displayed If the fuel temperature indicator is also defective - 5.4 °C is displayed

Display group 009

The values displayed are not relevant for fault finding within the service department.

Display group 009 -Injected quantity limitation-						
Read measured value block 9			⇒	◂ Indicated on display		
xxxx rpm	xx.x mg/H		xx.x mg/H			
1	2	3	4	◂ Display zones	Specification	Evaluation
				Quantity limitation	---	---
					---	---
		Injected quantity (cruise control system active)			---	---
	Engine speed				---	---

Display group 012

The values displayed are not relevant for fault finding within the service department.

Display group 012 -Glow plug system-						
Read measured value block 12			⇒	◂ Indicated on display		
xxxxxxxx	xx.xx sec.	xx.x V	xxx.x °C			
1	2	3	4	◂ Display zones	Specification	Evaluation
				Coolant temperature	---	---
			Vehicle voltage		---	---
		Pre-glow period			---	---
	Glow status					

Display group 013 at idling speed (engine warm, coolant temperature not below 80 °C)

Display group 013 -Smooth idling speed control-						
Read measured value block 13			⇒	◂ Indicated on display		
x.xx mg/H	x.xx mg/H	x.xx mg/H				
1	2	3	4	◂ Display zones	Specification	Evaluation
			Cyl. 3 Smooth running control injected quantity		- 2.8...+ 2.8 mg/H	=> Page 30
		Cyl. 2 Smooth running control injected quantity			- 2.8...+ 2.8 mg/H	=> Page 30
	Cyl. 1 Smooth running control injected quantity				- 2.8...+ 2.8 mg/H	=> Page 30

Evaluation: Idling speed smooth running control display

The injection system is equipped with an idling speed smooth running control. There may be power differences between the individual cylinders (component tolerances, injector delivery, compressions etc.) which are recognised and equalized via selective injected quantities.

satelettronica

Recognition at idling speed is via the signal from the engine speed sender. If the signals are delivered at the same rhythm then all cylinders work the same. If one cylinder is weaker then the crankshaft takes longer for the next half revolution. Conversely a more powerful cylinder accelerates the crankshaft so less time is taken.
If the control unit recognises a difference, then the relevant cylinder is given more or less fuel, until the engine runs evenly again.
+... mg/H: The respective cylinder is less powerful and is therefore supplied with more fuel.
-... mg/H: The respective cylinder is more powerful and is therefore supplied with less fuel.

Display group 015

The values displayed are not relevant for fault finding within the service department.

Display group 015 -Fuel consumption-						
Read measured value block 15 ⇒				◂ Indicated on display		
xxxx rpm	xx.x mg/H	xx.xx l/h	xx.x mg/H			
1	2	3	4	◂ Display zones	Specification	Evaluation
				Injection quantity requirement (driver's requirement via accelerator pedal)	---	---
			Fuel consumption		---	---
		Injection quantity (actual)			---	---
	Engine speed				---	---

Display group 016 at idling

Display group 016 -Additional heater-						
Read measured value block 16 ⇒				◂ Indicated on display		
xxx %	xxxxxxxx	xx	xx.x V			
1	2	3	4	◂ Display zones	Specification	Evaluation
				Voltage supply from control unit	---	---
			Activation of heater elements			=> Page 32
		Additional heater				=> Page 31
	Alternator loading				---	---

Evaluation: Additional heater display

Significance of figures in 8-digit number block for additional heater:

Significance when display = 1								
x	x	x	x	x	x	x	x	Additional heater switched off, because:
							1	Coolant temperature more than 70 °C...80 °C or intake air temperature more than + 5 °C
						1		Alternator defective
					1			Battery voltage below 9 V
				1				Engine speed below 760 rpm
			1					Engine start within last 10 secs.
		1						Coolant temperature sender -G62 or intake manifold temperature sender -G72 defective or Additional heater final output stage defective
	1							Not relevant
1								Not relevant

satelettronica

Evaluation: Heater element activation display

Significance of figures in 2-digit number block for heater element activation:

Significance when display = 1		
x	x	Heater element activation
	1	Low heat output relay -J359 on
1		High heat output relay -J360 on

Display group 018 at idling speed (engine warm, coolant temperature not below 80 °C)

Display group 018 -Unit injector valve status-						
Read measured value block 18 ⇒				◂ Indicated on display		
xx	xx	xx				
1	2	3	4	◂ Display zones	Specification	Evaluation
						=> Page 32
			No. 3 Cyl. unit injector valve		0	
		No. 2 Cyl. unit injector valve			0	
	No. 1 Cyl. unit injector valve				0	

Evaluation: Unit injector valve display

V.A.G 1551 display	Possible fault cause	Fault elimination
If a number other than 0 is displayed	- Unit injector valves defective - Wiring open circuit	- Check unit injector valves =>Page 70
	- Insufficient fuel - Air in fuel system	- Check fuel supply system => Repair group 20; Removing and installing parts of fuel supply system

6.5 - Measured values at full throttle

Display group 000 at full throttle (test drive in 3rd gear, coolant temperature not below 80 °C)

Notes:

- When testing, accelerate vehicle at full throttle.
- The measured values must be printed out or read (2nd person required) when the revolutions reach 3,000 rpm.

Display group 000 (decimal displayed value)												
▪ Engine speed 2900...3100 rpm												
Read measured value block 0										◂ Indicated on display		
x	x	x	x	x	x	x	x	x	x			
1	2	3	4	5	6	7	8	9	10	◂ Display zones	Specification	Corresponds to
										Air mass	>210	>700 mg/H
									Fuel temperature		85...178	20...85°C
								Intake manifold temperature			190...51	5...100°C

Protected by copyright. Copyright by Volkswagen AG. Volkswagen AG does not permit unless authorised by Volkswagen AG, in part or in whole, commercial purposes, or for private use. Volkswagen AG does not guarantee or accept any liability with respect to the correctness of information in this document.
satelettronica

Display group 000 (decimal displayed value)		
Coolant temperature	80...36	80...110°C
Atmospheric pressure	181...222	900...1100 mbar
Intake manifold pressure	177...216	1800...2200 mbar
Injected quantity	156...175	43...48 mg/H
Accelerator pedal position	255	100 %
Commencement of injection	79...56	15...22°BTDC
Engine speed	134...154	2800...3200 rpm

Display group 004 at full throttle (test drive in 3rd gear, coolant temperature not below 80 °C)

Notes:

- When testing, accelerate vehicle at full throttle.
- The measured values must be printed out or read (2nd person required) when the revolutions reach 3,000 rpm.

Display group 004 -Unit injector valve activation-						
Read measured value block 4 ⇒				◂ Indicated on display		
xxxx rpm	xx.x° BTDC	xx.x° CA	xx.x° CA			
1	2	3	4	◂ Display zones	Specification	Evaluation
				Synchronisation angle	-6...+6 ° CA	=> Page 28
			Injection period (specification)		17...24° CA	---
		Commencement of injection (specification)			15...22° BTDC	---
	Engine speed				2800...3200 rpm	---

Display group 008 at full throttle (test drive in 3rd gear, coolant temperature not below 80 °C)

Notes:

- When testing, accelerate vehicle at full throttle.
- The measured values must be printed out or read (2nd person required) when the revolutions reach 3,000 rpm.

Display group 008 -Quantity limitation-						
Read measured value block 8 ⇒				◂ Indicated on display		
xxxx rpm	xx.x mg/H	xx.x mg/H	xx.x mg/H			
1	2	3	4	◂ Display zones	Specification	Evaluation
				Injection quantity limitation due to air mass drawn in (smoke prevention)	46...55 mg/H	=> Page 34
			Injection quantity limitation via revs (torque limitation)		43...48 mg/H	=> Page 34
		Injection quantity (driver's requirement)			60...69 mg/H	=> Page 33
	Engine speed				2800...3200 rpm	---

Evaluation: Injected quantity (driver's requirement) display

V.A.G 1551 display	Possible fault cause	Fault elimination
Below 60 mg/H	- No full throttle	- Repeat check at full throttle.

satelettronica

V.A.G 1551 display	Possible fault cause	Fault elimination
	- Accelerator pedal position sender -G79 defective	- Check -G79 => Repair group 20; Removing and installing parts of fuel supply system; Checking accelerator pedal position sender Checking accelerator pedal position sender

Evaluation: Injected quantity limitation via revs. (torque limitation) display

V.A.G 1551 display	Possible fault cause	Fault elimination
Below 43 mg/H	- Revs. too high or too low	- Read off specified value at 3000 rpm.

Evaluation: Injection quantity limitation due to air mass drawn in (smoke prevention) display

V.A.G 1551 display	Possible fault cause	Fault elimination
Below 46 mg/H	- Air mass drawn in insufficient	- Check air mass meter => Page 65
	- Exhaust gas recirculation quantity too high	- Check exhaust gas recirculation => Repair group 26; Exhaust gas recirculation system; Checking exhaust gas recirculation Checking exhaust gas recirculation

Display group 010 at full throttle (test drive in 3rd gear, coolant temperature not below 80 °C)

Notes:

- When testing, accelerate the vehicle at full throttle.
- The measured values must be printed out or read (2nd person required) when the revolutions reach 3,000 rpm.

Display group 010 -Air quantities-						
Read measured value block 10 ⇒ xxx mg/H xxxx mbar xxxx mbar xxx.x %				◂ Indicated on display		
1	2	3	4	◂ Display zones	Specification	Evaluation
				Accelerator pedal position	100 %	=> Page 35
			Intake manifold pressure (charge pressure)		1800...2200 mbar	=> Page 35
		Atmospheric pressure (ambient pressure)			900...1100 mbar	---
	Air mass drawn in				>700 mg/H	=> Page 34

Evaluation: Air mass drawn in display

V.A.G 1551 display	Possible fault cause	Fault elimination
Below 700 mg/H	- Revs. too low or too high	- Read off specified value at 3000 rpm.
	- Charge pressure too low	- Check charge pressure control => Repair group 21; Checking charge pressure control

Protected by copyright. Copying for private or commercial purposes, in part or in whole, is not permitted unless authorised by Volkswagen AG. Volkswagen AG does not guarantee or accept any liability with respect to the correctness of information in this document. Copyright by Volkswagen AG.
satelettronica

	- Air mass meter defective	- Check air mass meter => Page 65 If a fault is present the measured value block indicates a constant air mass value of approx. 539 mg/H over total revolution and load range

Evaluation: Intake manifold pressure (charge pressure) display

V.A.G 1551 display	Possible fault cause	Fault elimination
Below 1800 mbar	- Charge pressure control defective	- Check charge pressure control => Repair group 21; Checking charge pressure control
Above 2200 mbar	- Turbocharger defective	

Evaluation: Accelerator pedal position display

V.A.G 1551 display	Possible fault cause	Fault elimination
Below 100 %	- No full throttle	- Repeat test at full throttle.
	- Accelerator pedal position sender -G79 defective	- Check -G79 => Repair group 20; Removing and installing parts of fuel supply system; Checking accelerator pedal position sender Checking accelerator pedal position sender

Display group 011 at full throttle (test drive in 3rd gear, coolant temperature not below 80 °C)

Notes:

- When testing, accelerate the vehicle at full throttle.
- The measured values must be printed out or read (2nd person required) when the revolutions reach 3,000 rpm.

Display group 011 -Charge pressure control-						
Read measured value block 11 ⇒				◂ Indicated on display		
xxxx rpm xxxx mbar xxxx mbar xxx %						
1	2	3	4	◂ Display zones	Specification	Evaluation
				Duty cycle from charge pressure control valve	40...95 %	---
			Charge pressure (specification)		1800...2200 mbar	=> Page 35
		Charge pressure (specification)			1800...2100 mbar	---
	Engine speed				2800...3200 rpm	---

Evaluation: Charge pressure display (actual)

V.A.G 1551 display	Possible fault cause	Fault elimination
Below 1800 mbar	- Charge pressure control defective	- Check charge pressure control => Repair group 21; Checking charge pressure control
	- Turbocharger defective	
	- Measured at high altitude	No fault, if possible repeat measurement at 0 m NN (sea level)

Protected by copyright. Copying for private or commercial purposes, in part or in whole, is not permitted unless authorised by Volkswagen AG. Volkswagen AG does not guarantee or accept any liability with respect to the correctness of information in this document. Copyright by Volkswagen AG.
satelettronica

V.A.G 1551 display	Possible fault cause	Fault elimination
Above 2200 mbar	- Turbocharger defective	- Check charge pressure control => Repair group 21; Checking charge pressure control

Protected by copyright. Copying for private or commercial purposes, in part or in whole, is not permitted unless authorised by Volkswagen AG. Volkswagen AG does not guarantee or accept any liability with respect to the correctness of information in this document. Copyright by Volkswagen AG.
satelettronica

23 - Mixture preparation, Injection

1 - Servicing Diesel direct injection system

1.1 - Servicing Diesel direct injection system

The Diesel direct injection system control unit is equipped with a fault memory. Before starting repairs, adjustments and fault finding, the fault memory must be interrogated and final control diagnosis completed =>Page 7 .

Note:

When performing check and adjustment operations the control unit may recognized and store faults.

For this reason after completing all check and adjustment operations it is necessary to erase fault memory

=>Page 8 .

1.2 - Safety precautions

Observe following if test and measuring instruments are required during a test drive:

- Test and measuring instruments must be secured to rear seat and operated by a 2nd person from this location.

  If test and measuring instruments are operated from front passenger's seat and the vehicle is involved in an accident, there is a possibility that the person sitting in this seat may receive serious injuries when the airbag is triggered.

Warning! Secure fault reader to rear seat and operate from this position.

To prevent injuries to persons and/or damage to the injection and glow plug system, the following must be noted:

- The ignition must be switched off before connecting or disconnecting injection or glow plug system wiring or tester cables.
- If the engine is to be turned at starter speed, without starting, e.g. when checking compressions, disconnect unit injector connector on cylinder head.
- Before disconnecting battery, obtain radio code for radios fitted with anti-theft coding.
- Disconnecting and connecting the battery must only be undertaken when the ignition switched off otherwise the Diesel direct injection system control unit may be damaged.

1.3 - Rules for cleanliness

When working on the fuel supply/injection system, pay careful attention to the following rules for cleanliness:

- Thoroughly clean all unions and the adjacent areas before disconnecting.
- Place parts that have been removed on a clean surface and cover. Do not use fluffy cloths!
- Carefully cover opened components or seal, if the repair cannot be carried out immediately.
- Only install clean components:
  Only unpack replacement parts immediately prior to installation.
  Do not use parts that have been stored loose (e.g. in tool boxes etc.).

satelettronica

- When the system is open:
  Do not work with compressed air if this can be avoided.
  Do not move vehicle unless absolutely necessary.
- Also ensure that no diesel fuel runs onto the coolant hoses. Hoses coming in contact with fuel must be cleaned immediately. Damaged hoses must be replaced.

1.4 - Fitting locations overview

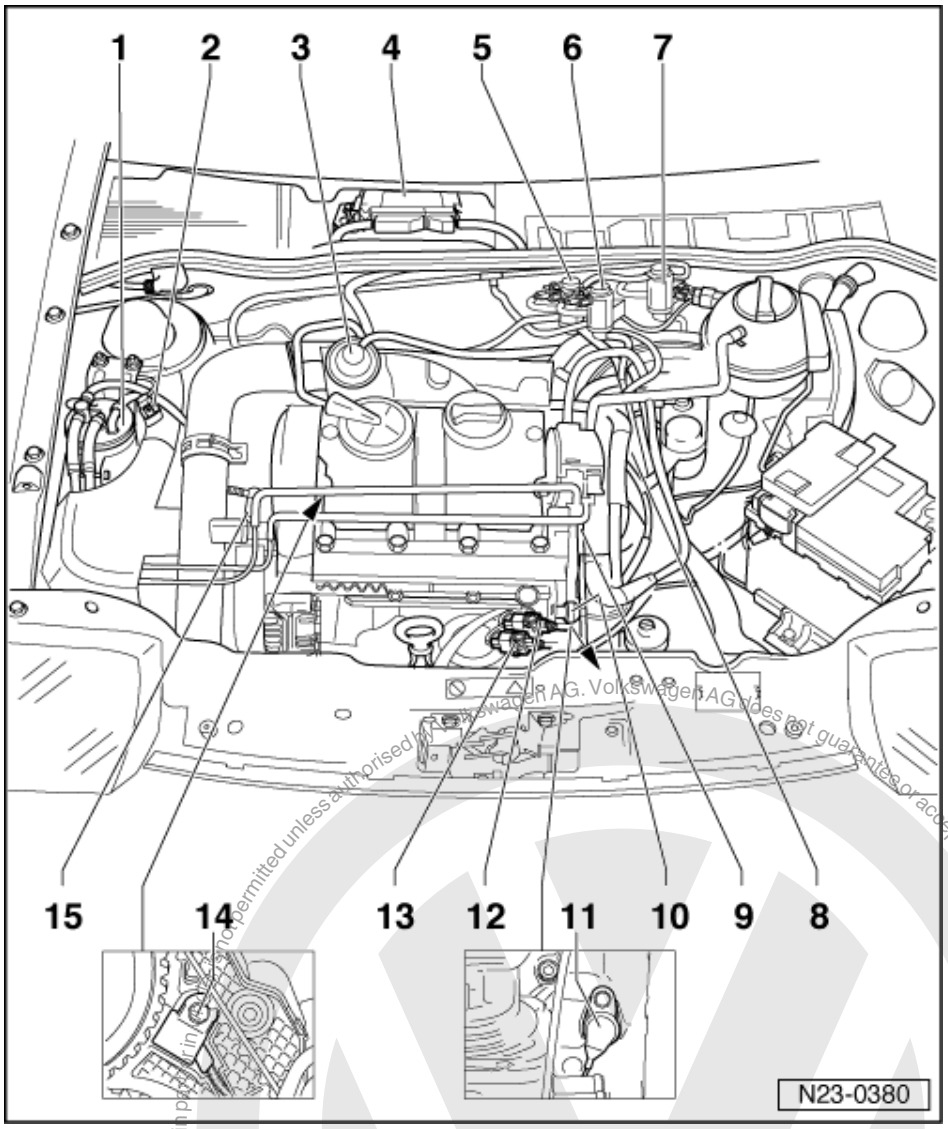

Components A to D are not shown on the illustration.

A - Brake pedal switch (F47)
- In footwell on brake pedal

B - Brake light switch (F)
- In footwell on brake pedal

C - Accelerator pedal position sender (G79)
- In footwell on accelerator

=> Repair group 20; Removing and installing parts of fuel supply system; Servicing accelerator mechanism
Removing and installing parts of fuel supply system Servicing accelerator mechanism

Protected by copyright. Copying for private or commercial purposes, in part or in whole, is not permitted unless authorised by Volkswagen AG. Volkswagen AG does not guarantee or accept any liability with respect to the correctness of information in this document. Copyright by Volkswagen AG.
satelettronica

D - Clutch pedal switch (F36)
- In footwell on clutch pedal

1 Fuel filter
2 Air mass meter (G70)
3 Exhaust gas recirculation valve (mechanical)
- With intake manifold flap

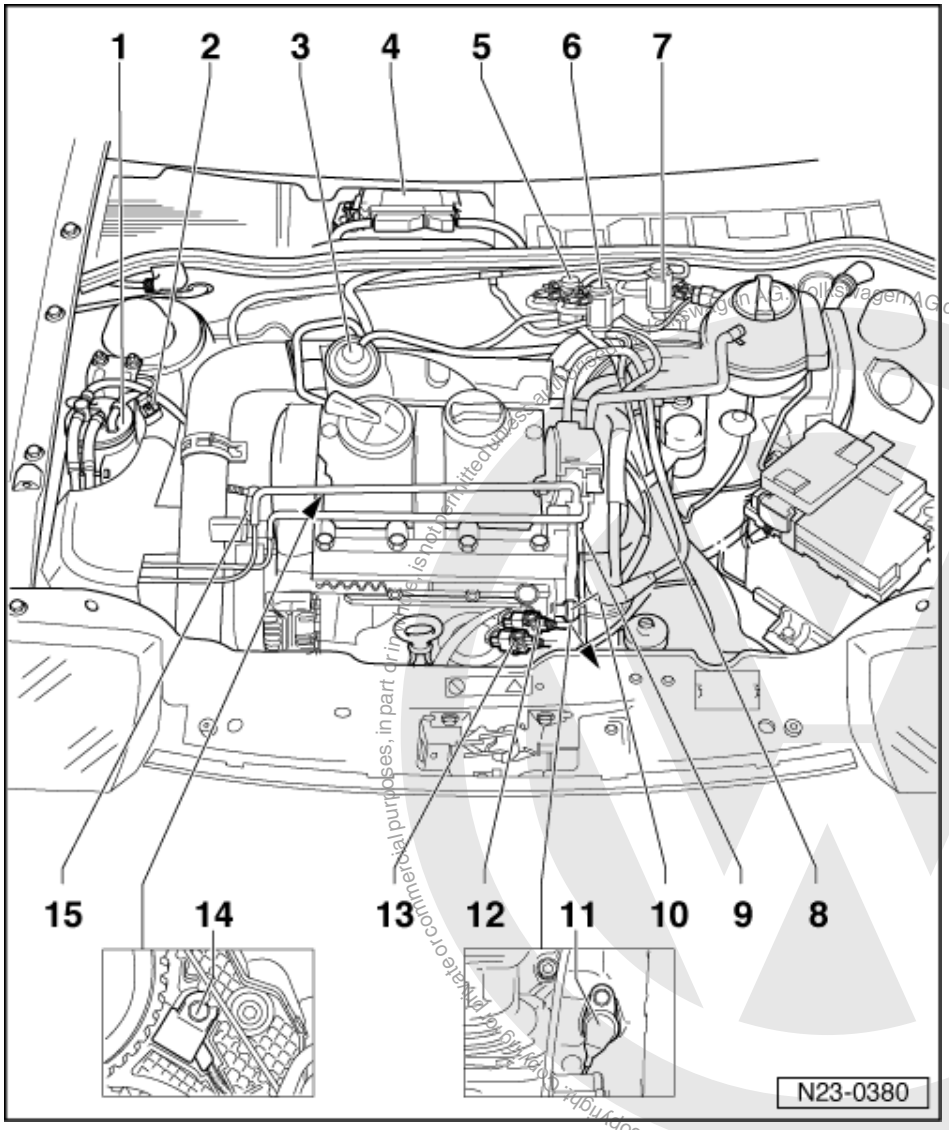

4 Diesel direct injection system control unit (J248)
- With elevation sender (F96)
- Renew => Page 81

5 Intake manifold flap change-over valve (N239)
6 Exhaust gas recirculation valve (N18)
7 Charge pressure control solenoid valve (N75)
8 Coolant temperature sender (G62)
9 Connector
- For unit injector (N240...243)

10 Fuel temperature sender (G81)
11 Engine speed sender (G28)

Protected by copyright. Copying for private or commercial purposes, in part or in whole is not permitted unless authorised by Volkswagen AG. Volkswagen AG does not guarantee or accept any liability with respect to the correctness of information in this document. Copyright by Volkswagen AG.
satelettronica

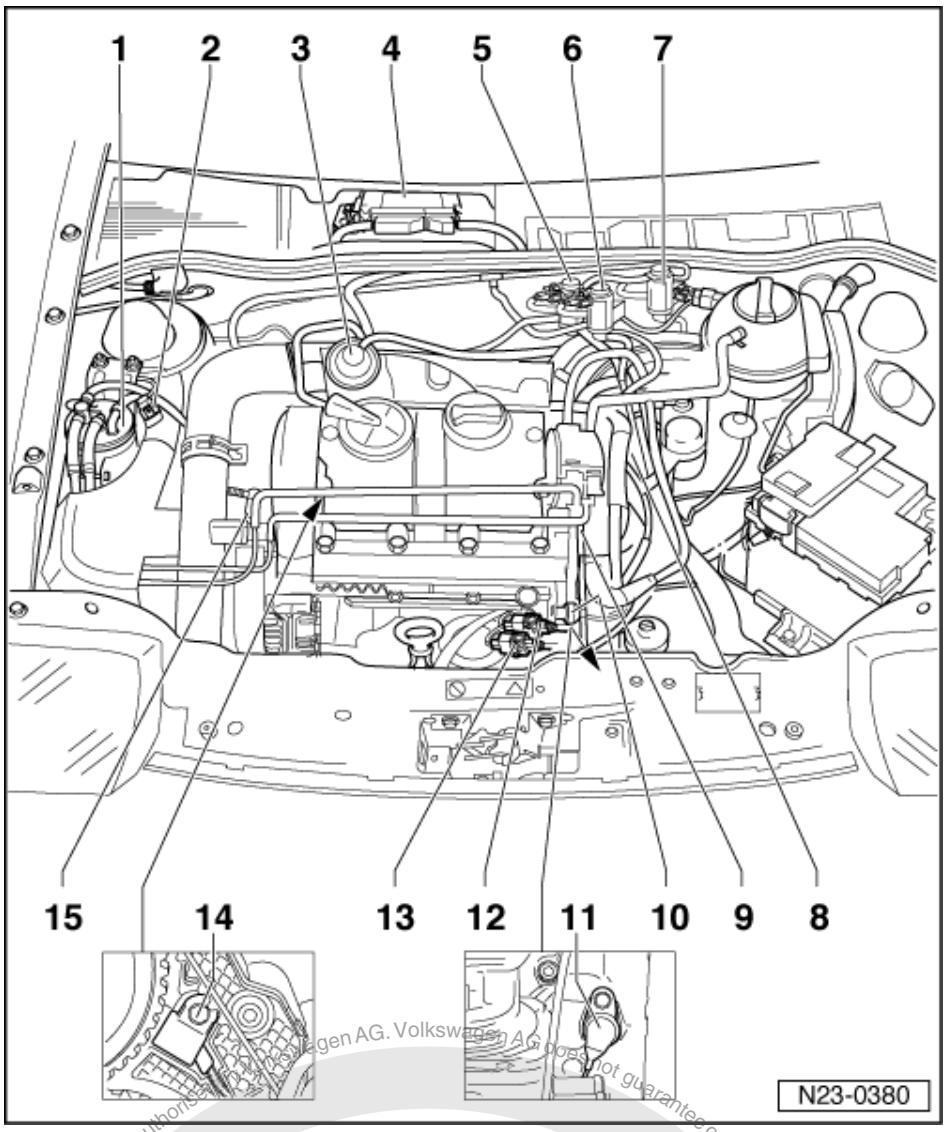

12 Connector
- For Hall sender (G40), for camshaft position

13 Connector
- For engine speed sender (G28)

14 Hall sender (G40)
- For camshaft position

15 Intake manifold pressure sender (G71) with intake manifold temperature sender (G72)

satelettronica

1.5 - Servicing intake manifold flap

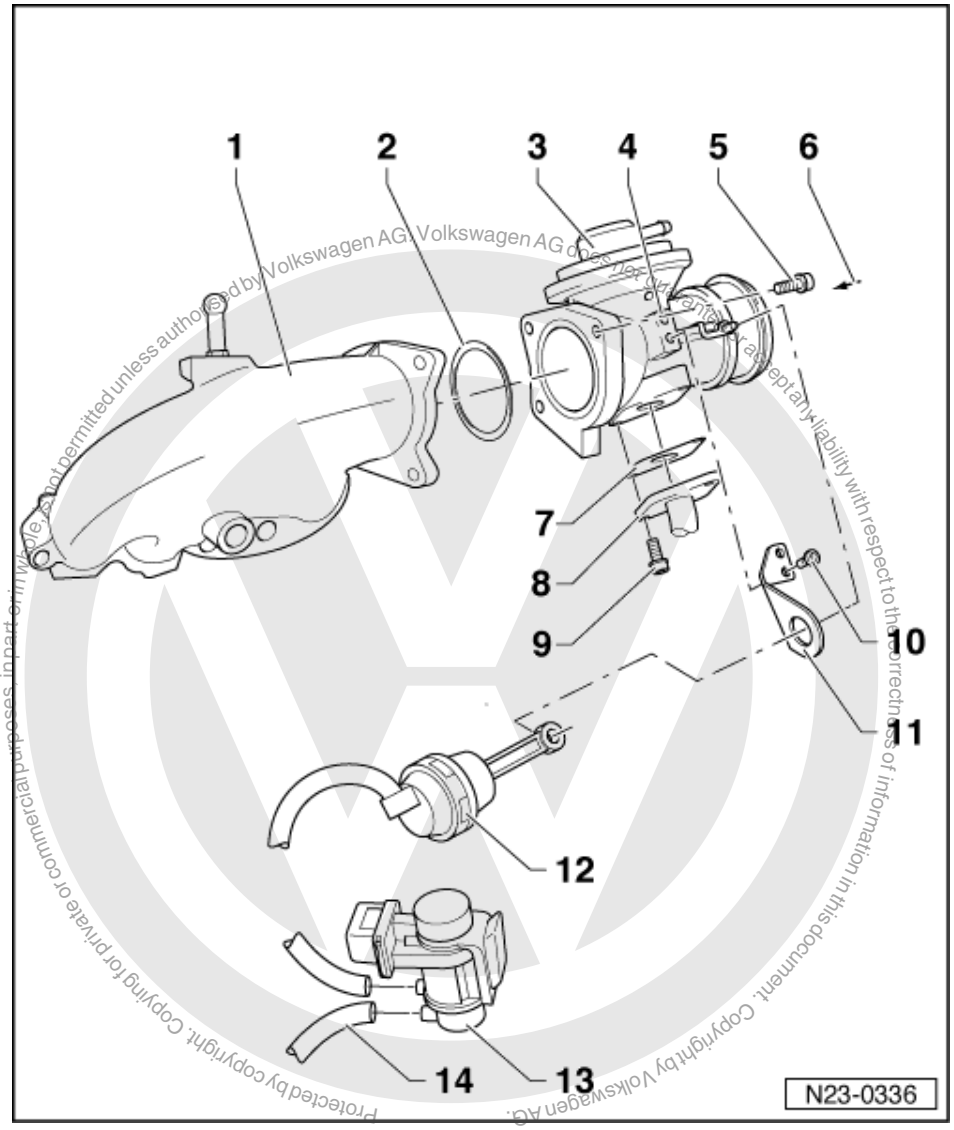

The intake manifold flap is closed for approx. 3 seconds when stopping engine and then opens again. This reduces the stop jolt.

Checking intake manifold flap change-over => Page 68

1 Intake manifold
2 O ring
- Renew

3 Exhaust gas recirculation valve (mechanical)
4 Intake connecting flange
- With exhaust gas recirculation valve and intake manifold flap

5 10 Nm
6 From charge air cooler

satelettronica

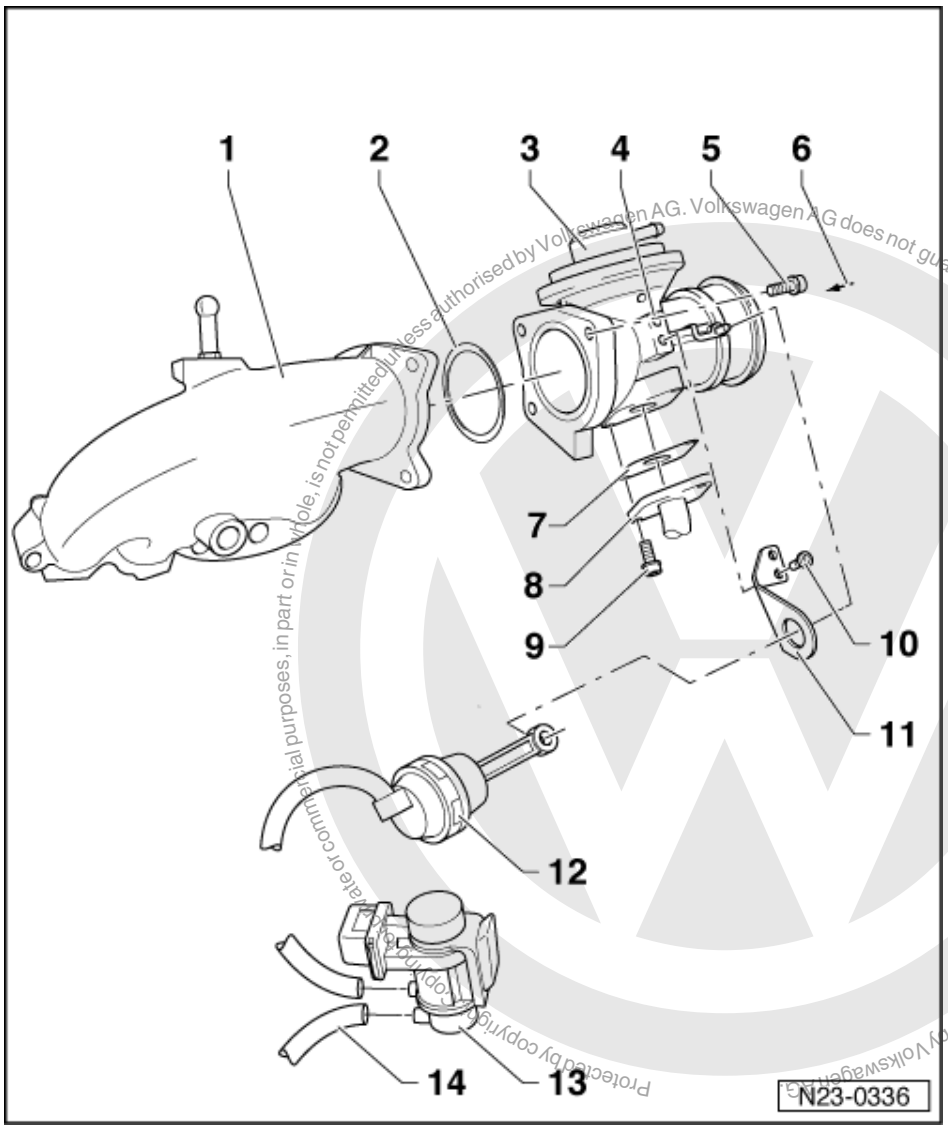

Protected by copyright. Copyright by Volkswagen AG. Volkswagen AG does not guarantee or accept any liability with respect to the correctness of information in this document. Copyright by Volkswagen AG. Reproduction, in part or in whole, is not permitted unless authorised by Volkswagen AG. Volkswagen AG does not guarantee or accept any liability with respect to the correctness of information in this document. Copyright by Volkswagen AG.

satelettronica

7 Gasket
- Renew

8 Connecting pipe
- To exhaust manifold

9 25 Nm

10 10 Nm

11 Bracket

12 Vacuum control element

13 Intake manifold flap change-over valve
- Checking => Page 68

14 Vacuum supply
- From vacuum pump

1.6 - Servicing unit injector

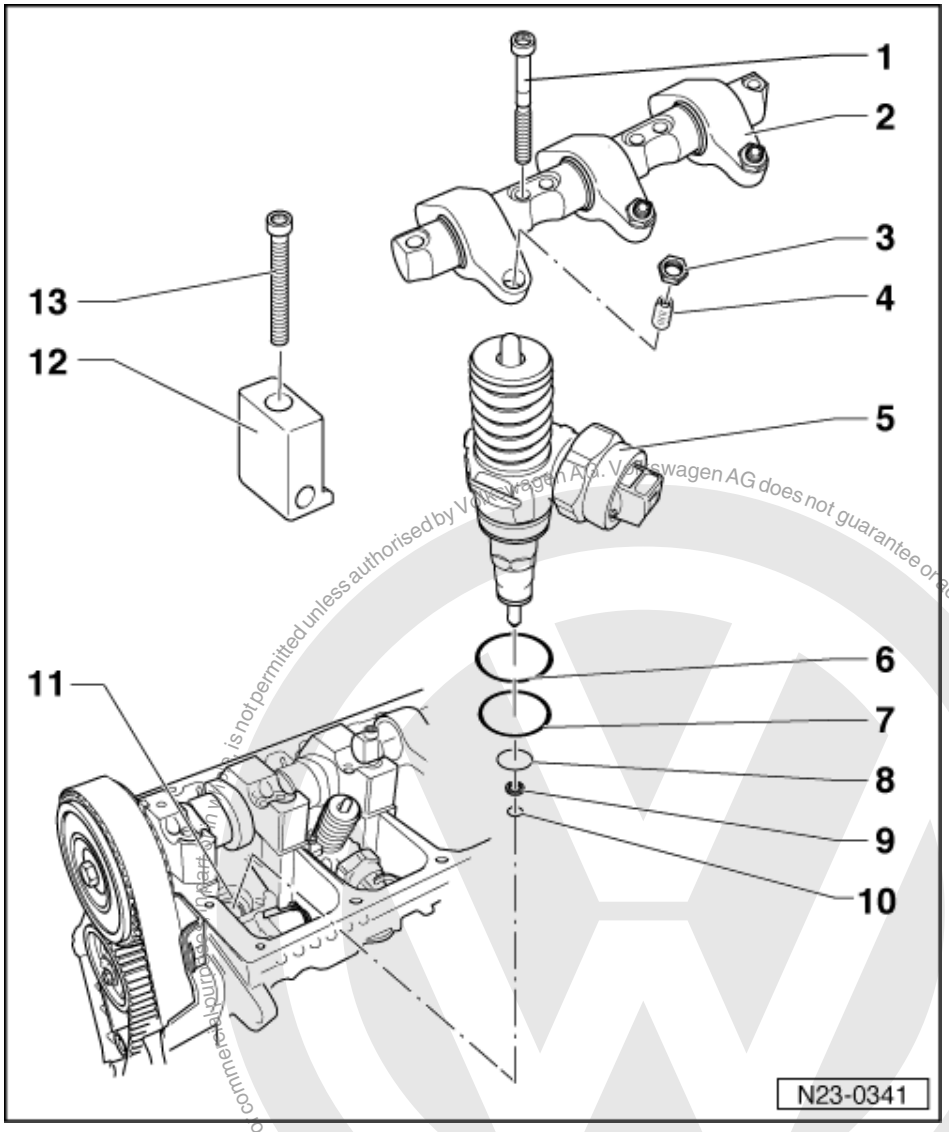

- Observe rules for cleanliness =>Page 37
- Always renew seals and O-rings

1 **20 Nm + 1/4 turn (90°) further**
  - Renew

2 **Rocker arm shaft**
  - With rocker arm
  - Removing and installing =>Page 48 , Removing and installing unit injector

3 **Lock nut**

satelettronica

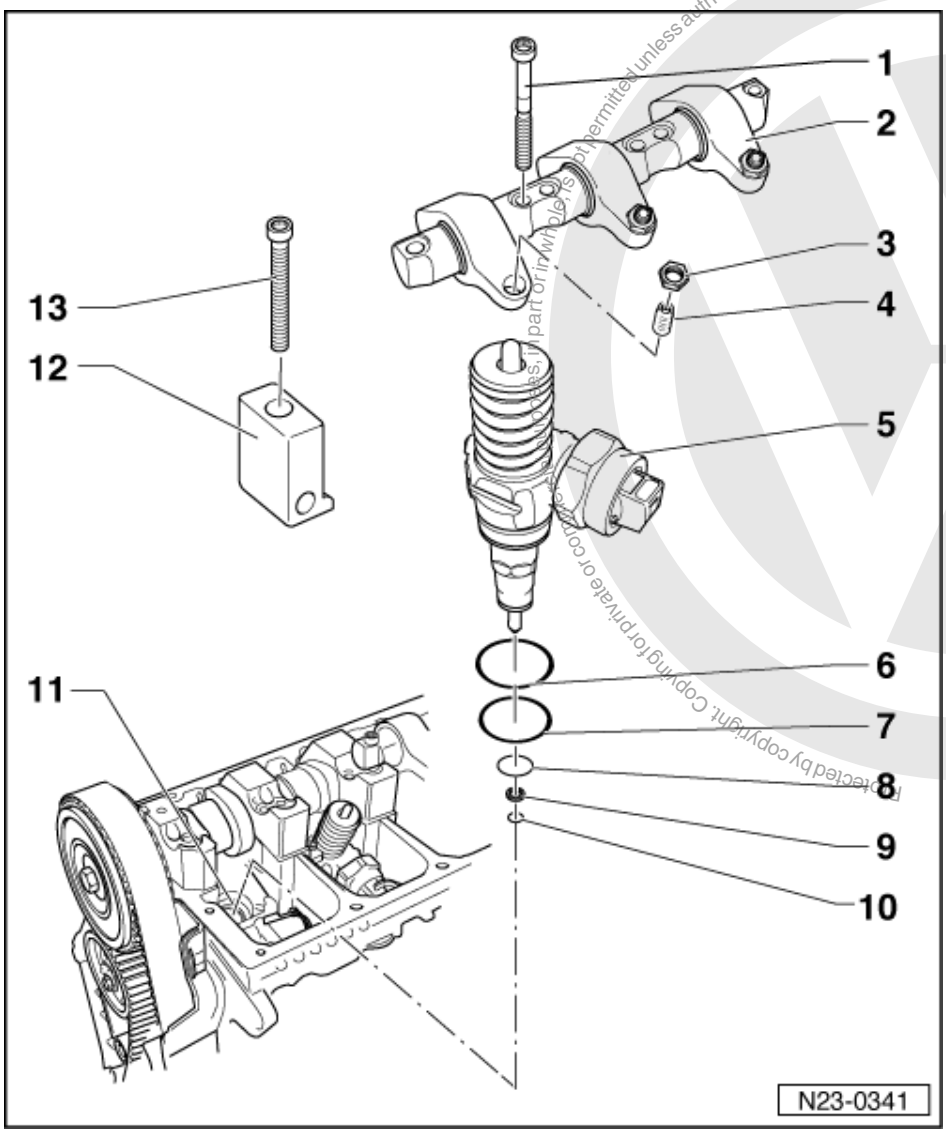

4 Adjustment screw
- Renew if there are signs of wear when fitting a new unit injector
- Grease contact surface to unit injector ball pin with G 000 100 grease

5 Unit injector
- Check ball pin for signs of wear, replace if necessary
- Grease contact surface to adjustment screw with G 000 100 grease
- Removing and installing
  =>Page 48

6 O-Ring
- Renew
  =>Page 46

7 O-Ring
- Renew
  =>Page 46

Protected by copyright. Copying for private or commercial purposes, in part or in whole, is not permitted unless authorised by Volkswagen AG. Volkswagen AG does not guarantee or accept any liability with respect to the correctness of information in this document. Copyright by Volkswagen AG.
satelettronica

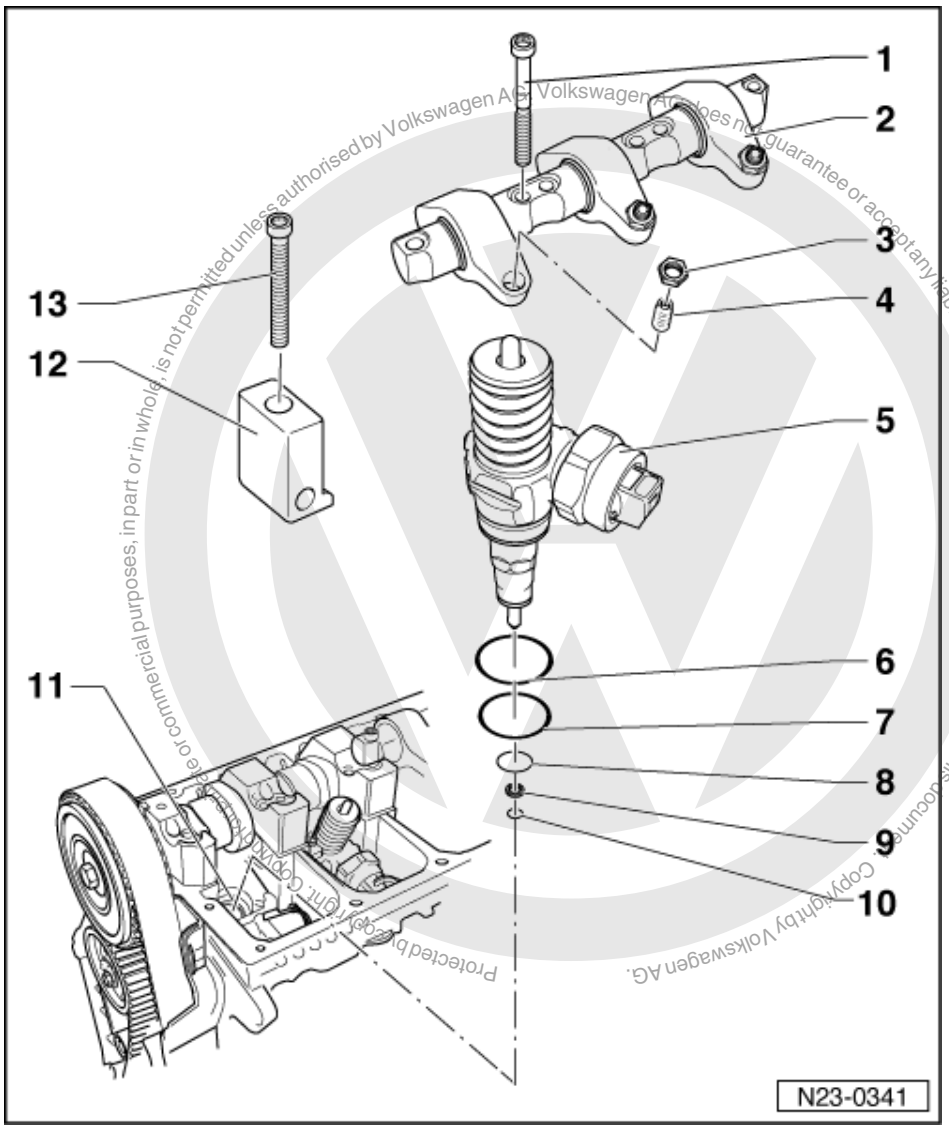

Protected by copyright. Copyright by Volkswagen AG.
Copyright by Volkswagen AG. Volkswagen AG does not guarantee or accept any liability with respect to the correctness of information in this document. Copying for private or commercial purposes, in part or in whole, is not permitted unless authorised by Volkswagen AG.

8 O-Ring
- Renew
  =>Page 46

9 Heat insulation seal
- Renew

10 Circlip

11 Cylinder head

12 Tensioning block

13 12 Nm + 3/4 turn (270 °) further
- Renew

satelettronica

1.7 - Removing and installing O rings for unit injector

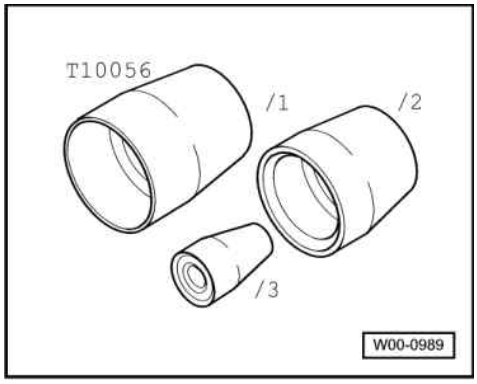

Special tools, workshop equipment, testers, measuring instruments and auxiliary items required

- T10056 Assembly sleeves

Removing

- Lever old O rings very carefully out of unit injector.
- Ensure above all that no burrs are formed on O ring seat.

Installing

Notes:

- Always use the assembly sleeves to fit the O rings. There is a danger of damaging the sleeves if the sleeves are not used.
- Gleitender Einsatz von O-Ringen ohne unterschiedliche Farbkennung. Achten Sie auf die richtige Zuordnung der O-Ringe zu den Nuten: die Ringstärke nimmt zur Einspritzdüse hin ab.
- Prevent the O rings from rolling when sliding them on. The O rings must not be twisted when seated in the unit injector.

- Pull heat shield seat off together with securing clip.
- Clean O ring seating surfaces on unit injector very carefully.

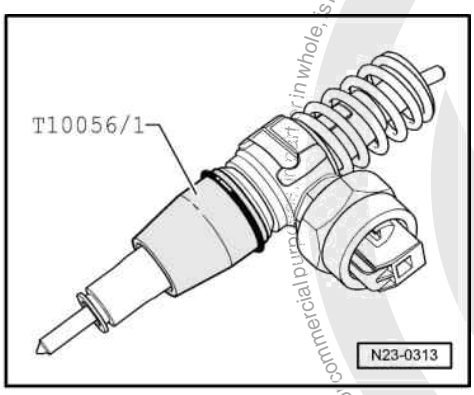

- -> Slide assembly sleeve T10056/1 onto stop on unit injector.
- Slide upper O ring carefully on to assembly sleeve and into seat on unit injector.
- Remove assembly sleeve.

Protected by copyright. Copying for private or commercial purposes, in whole or in part, is not permitted unless authorised by Volkswagen AG. Volkswagen AG does not guarantee or accept any liability with respect to the correctness of information in this document. Copyright by Volkswagen AG.
satelettronica

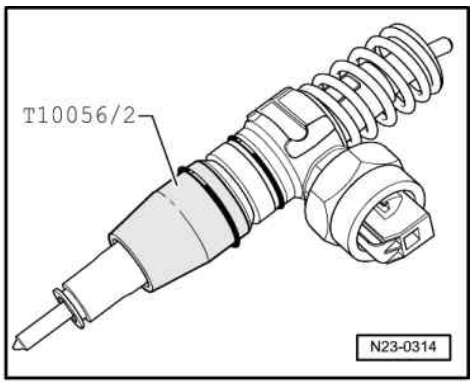

- -> Slide assembly sleeve T10056/2 onto stop on unit injector.
- Slide the middle O ring carefully on to assembly sleeve and into seat on unit injector.
- Remove assembly sleeve.

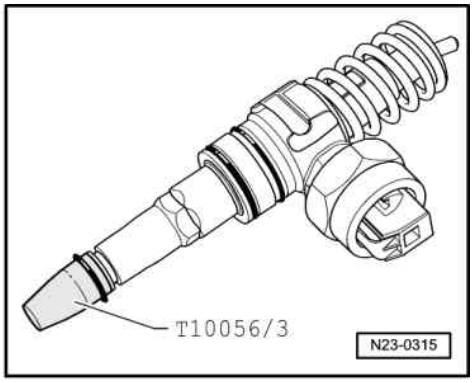

- -> Slide assembly sleeve T10056/3 onto stop on unit injector.
- Slide the lower O-ring carefully onto assembly sleeve and into unit injector seat.
- Remove assembly sleeve.
- Fit new heat shield seal together with securing clip.

Protected by copyright. Copying for private or commercial purposes, in part or in whole, is not permitted unless authorised by Volkswagen AG. Volkswagen AG does not guarantee or accept any liability with respect to the correctness of information in this document. Copyright by Volkswagen AG.
satelettronica

1.8 - Removing and installing unit injector

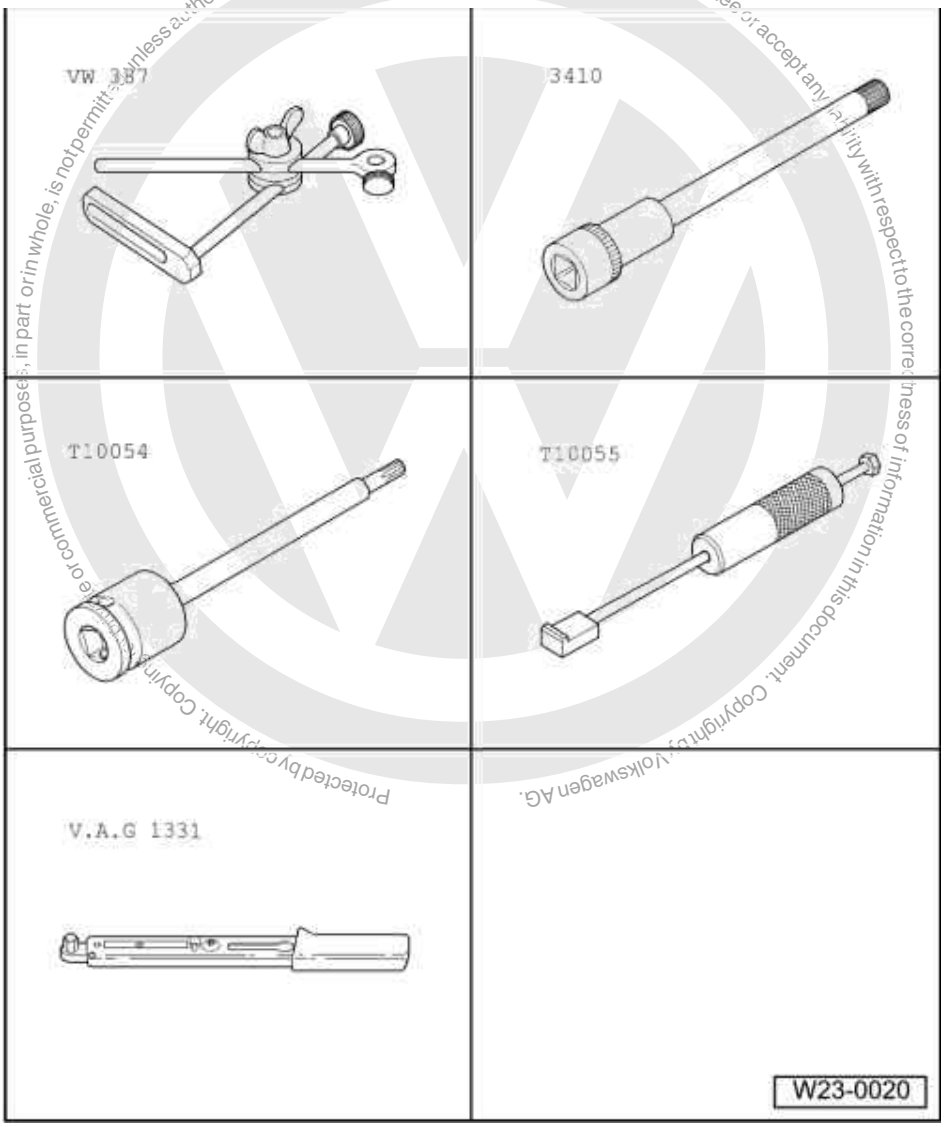

Special tools, workshop equipment, test and measuring appliances and aux. items required

- VW 387 Universal dial gauge bracket
- 3410 Insert
- T10054 Insert
- T10055 Puller
- V.A.G 1331 Torque wrench (5...50 Nm)

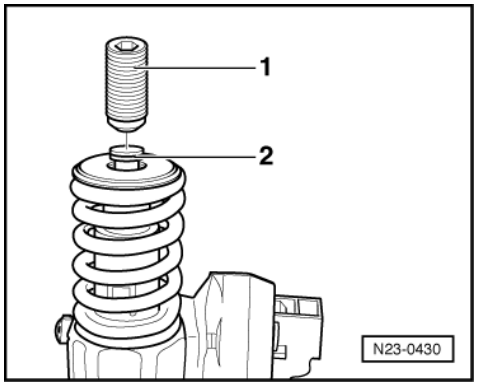

Protected by copyright. Copyright by Volkswagen AG.
Volkswagen AG, Wolfsburg
Unless authorised by Volkswagen AG, Wolfsburg, is not permitted to use or commercial purposes, in part or in whole, is not permitted. Volkswagen AG does not guarantee or accept any liability with respect to the correctness of information in this document.
satelettronica

Hinweis:

Mit Einsatz der Wartungsintervallverlängerung sind die Einstellschraube -1- und der Kugelbolzen -2- der Pumpe-Düse-Einheit geändert worden. Bei älteren Motoren ohne Wartungsintervallverlängerung ist eine gemischte Verbauung zulässig.

Removing

- Remove upper toothed belt guard and cylinder head cover.
- Turn crankshaft until the cam tabs point upwards for the unit injector which is to be removed.

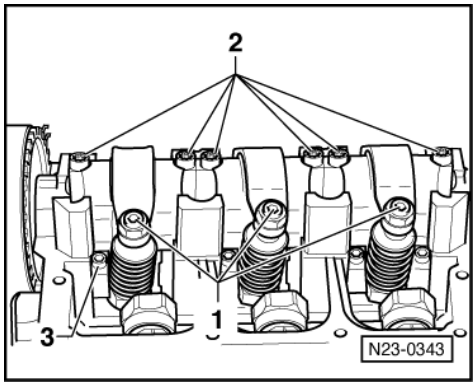

- -> Loosen lock nut of adjustment screw -1- and screw the screw out until the relevant rocker arm lies against the plunger spring of the unit injector.
- Remove rocker arm securing bolts -2- (from outwards to inwards) with insert 3410 and take rocker arm shaft off.
- Remove tensioning block securing bolts -3- with insert T10054 and remove the block.
- Lever connector off unit injector using a screwdriver. To avoid canting, support opposite side of connector with light finger pressure.

  Observe unit injector cylinder allocation.

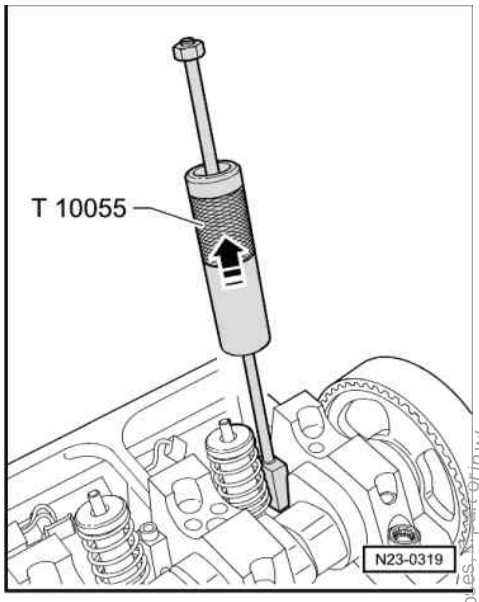

- -> Seat the puller into the slot on the side of the unit injector instead of the tensioning block.
- Pull unit injector out of cylinder head seat with gentle taps.

Installing

Notes:

- If a new unit injector is installed, the appropriate adjustment screw in the rocker arm must also be renewed.

satelettronica
Protected by copyright. Copying for private or commercial purposes, in part or in whole, is not permitted unless authorised by Volkswagen AG. Volkswagen AG does not guarantee or accept any liability with respect to the correctness of information in this document. Copyright by Volkswagen AG

- Each time work is performed which requires the unit injector to be adjusted, the adjustment screw in the rocker arm and also the unit injector ball pin must be cleaned and checked for signs of wear. If wear is evident the ball pin and the adjustment screw must be replaced.
- Grease the contact surface between ball pin and adjustment screw with G 000 100 grease.
- New unit injectors are delivered with the O ring and heat insulating gasket.

- Heat shield seal and O rings must be renewed if old unit injector is reused => Page 46
- Check that the three O rings and the heat shield seal along with securing clip are seating correctly before installing unit injector.

Note:
The seals must not be twisted.
- Oil the seals and fit the unit injector into the cylinder head with great care.
- Push the unit injector evenly into the cylinder head onto its stop.
- Fit the tensioning block into the slot on the side of the unit injector.

Note:
If the unit injector is not at right angles to the tensioning block the securing bolt may loosen and this can damage the unit injector or the cylinder head.
- Therefore align the unit injector as follows.
- Screw the new securing bolt into the tensioning block until the unit injector can still be turned easily.
- Now align the unit injector at right angles with the camshaft bearing caps.
- Check dimension "a" from outer edge of cylinder head to rounded edge of unit injector with a vernier gauge (measuring range min. 400 mm.

Note:
Gradual introduction of unit injector with new solenoid valve nut. A mixed installation whilst observing dimension "a" is permitted.

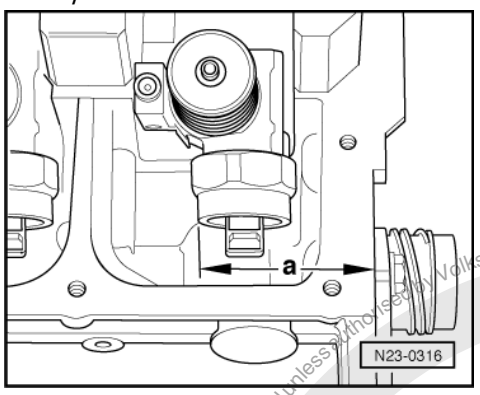

-> Unit injector with old solenoid valve nut

Cylinder	Dimension "a"
1	244.2 ±0.8 mm
2	156.2 ±0.8 mm
3	64.8 ±0.8 mm

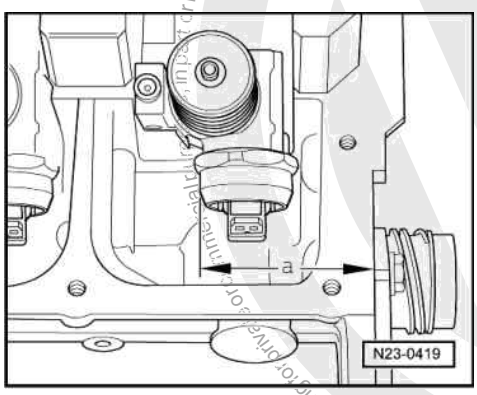

satelettronica
Protected by copyright. Copyright by Volkswagen AG. Volkswagen AG does not guarantee or accept any liability with respect to the correctness of information in this document. Copyright by Volkswagen AG.

-> Unit injector with new solenoid valve nut

Cylinder	Dimension "a"
1	245.0 ±0.8 mm
2	157.0 ±0.8 mm
3	65.6 ±0.8 mm

Continuation for all unit injectors

- Align the unit injector and tighten the securing bolt as follows:
  12 Nm and turn 270°(3/4 turn) further (the turning further can be done in several stages).
- Fit the rocker arm shaft and tighten the new securing bolts as follows.
- Tighten the inner and then both outer bolts hand tight evenly. Then using same sequence, tighten to
  20 Nm and 90° (1/4 turn) further.

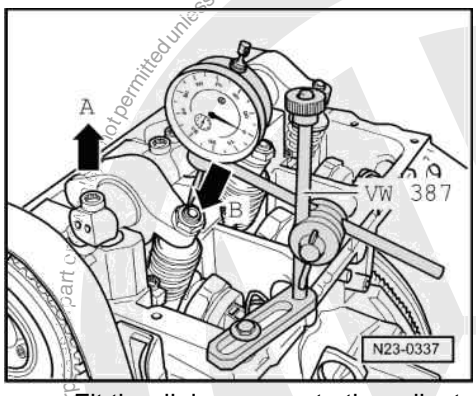

- -> Fit the dial gauge onto the adjustment screw of the unit injector as shown.
- Turn the crankshaft in engine direction of rotation until the roller of the rocker arm is positioned on the peak of the drive cam tab.
  Roller side -arrow A- positioned at highest point
  Dial gauge -arrow B- positioned at lowest point
- Remove dial gauge.
- Turn adjustment screw inwards into rocker arm until a firm resistance is felt (unit injector positioned at stop).

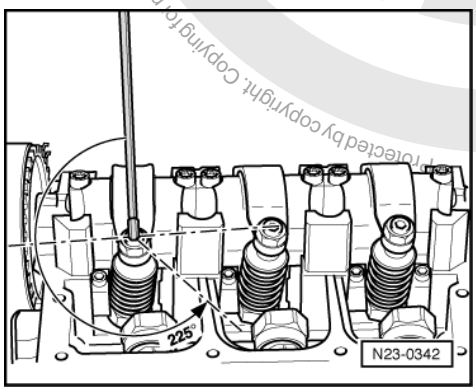

- -> Turn adjustment screw
  225°back off stop.
- Hold adjustment screw in this position and tighten the lock nut to
  30 Nm.
- Fit unit injector connector and install cylinder head cover and toothed belt guard.

satelettronica

2 - Checking components and functions

2.1 - Checking components and functions

2.2 - Checking Diesel direct injection system voltage supply

Special tools, workshop equipment, testers, measuring instruments and auxiliary items required

- Test box V.A.G 1598/31
- Hand multimeter V.A.G 1526 or multimeter V.A.G 1715
- Adapter set V.A.G 1594
- Current flow diagram

Test prerequisites:

- Battery voltage OK. (at least 11.5 V)

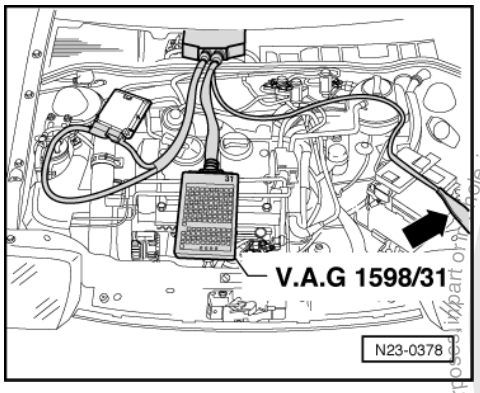

Test sequence

- Switch off ignition.
- -> Connect test box V.A.G 1598/31 to control unit and wiring harness.
- Measure voltage between following sockets:
  1/2 and 4/5
  37 and 4/5
  Specification: Approx. 0 V

- Switch on ignition.
- Again measure voltage between sockets:
  1/2 and 4/5
  37 and 4/5
  Specification approx. battery voltage

If the specifications are not obtained:

- Check voltage supply relay terminal 30 (J317).
- Check wiring connections for open circuit, short circuit and transfer resistance at contacts according to current flow diagram.

If no fault is found in wiring and relay:

- Renew Diesel direct injection system control unit (J248) => Page 81 .

Protected by copyright. Copying for private or commercial purposes, in part or in whole, is not permitted unless authorised by Volkswagen AG. Volkswagen AG does not guarantee or accept any liability with respect to the correctness of information in this document. Copyright by Volkswagen AG.
satelettronica

2.3 - Checking engine speed sender

The engine speed sender is speed and reference mark sender. A failure stops the engine.

Special tools, workshop equipment, testers, measuring instruments and auxiliary items required

- Test box V.A.G 1598/31
- Hand multimeter V.A.G 1526 or multimeter V.A.G 1715
- Adapter set V.A.G 1594
- Current flow diagram

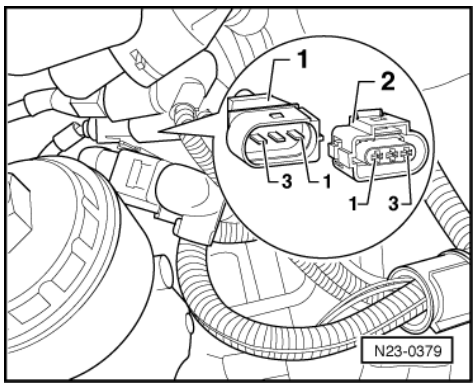

Test sequence

- Switch off ignition.
- -> Disconnect the engine speed sender grey connector -1- (to sender).

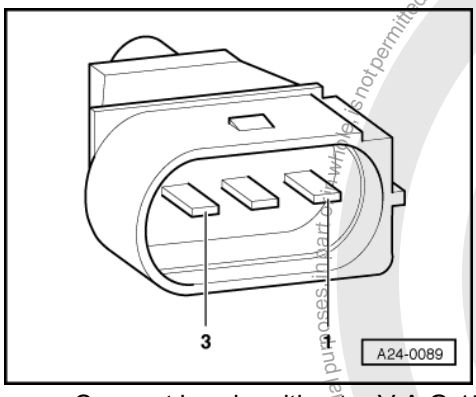

- -> Connect hand multimeter V.A.G 1526 (resistance measurement) using adapter cables from V.A.G 1594 to contacts 1 and 2 of engine speed sender connector.
  Specification: Approx. 450...550 ω

If the specification is not obtained:

- Renew engine speed sender -G28.

=> Repair group 13; Dismantling and assembling engine Dismantling and assembling engine

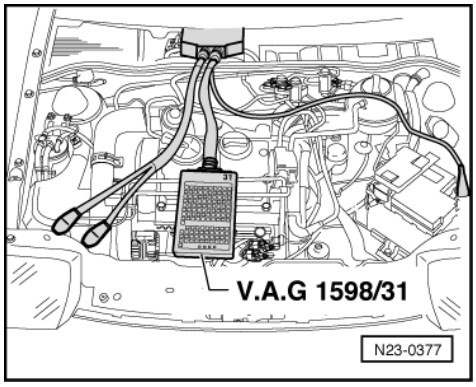

Protected by copyright. Copying for private or commercial purposes, in part or in whole, is not permitted unless authorised by Volkswagen AG. Volkswagen AG does not guarantee or accept any liability with respect to the correctness of information in this document. Copyright by Volkswagen AG.
satelettronica

If the specification is obtained:

- -> Connect test box V.A.G 1598/31 to control unit wiring harness.

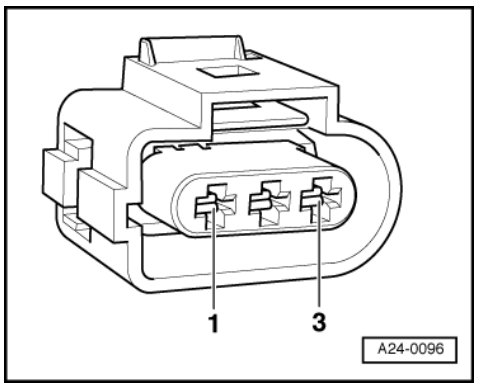

- -> Check wiring between test box and 3-pin connector for open circuit using current flow diagram.
  Contact 1+ socket 110
  Contact 2+ socket 102
  Contact 3+ socket 102
  Wire resistance: max. 1.5 ω
- Check wiring at 3 pin connector for short circuit to one another according to current flow diagram.
  Specification: ∞ω

If no fault is detected in the wiring:

- Renew Diesel direct injection system control unit (J248) => Page 81 .

2.4 - Checking intake manifold pressure sender and elevation sender

The altitude sender is located in the Diesel direct injection system control unit. The intake manifold pressure sender is a separate component and is located together with the intake manifold temperature sender in a housing on intake manifold.

Special tools, workshop equipment, testers, measuring instruments and auxiliary items required

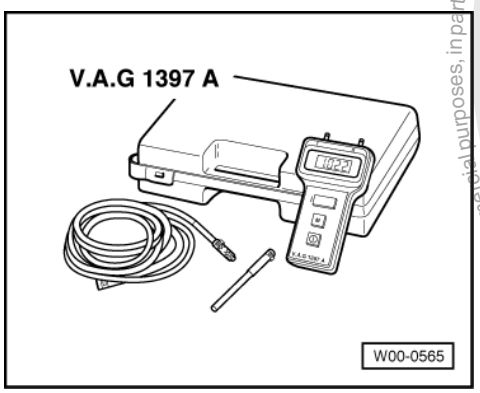

- Fault reader V.A.G 1551 or vehicle system tester V.A.G 1552 with cable V.A.G 1551/3
- -> V.A.G 1397 A Turbocharger tester
- Test box V.A.G 1598/31
- Hand multimeter V.A.G 1526 or multimeter V.A.G 1715
- Adapter set V.A.G 1594
- Current flow diagram

Test sequence

- Connect the fault reader V.A.G 1551 (V.A.G 1552) and with ignition switched on select engine electronics control unit with the "Address word" 01.

Protected by copyright. Copying for private or commercial purposes, in part or in whole, is not permitted unless authorised by Volkswagen AG. Volkswagen AG does not guarantee or accept any liability with respect to the correctness of information in this document. Copyright by Volkswagen AG.
satelettronica

(Connecting fault reader and selecting engine electronics control unit => Page 2 .)

-> Indicated on display:

```
Rapid data transfer      HELP
Select function XX
```

- Press keys 0 and 8 for the function "Read measured value block" and confirm entry with Q key.

-> Indicated on display:

```
Read measured value block
Enter display group number XXX
```

- Press keys 0, 1 and 0 for "Display group number 10" and confirm entry with Q key.

```
Read measured value block 10
     0 mg/H     1027 mbar     1013 mbar     0.0
%
```

-> Compare display in zone 2 (altitude sender -F96) with display in zone 3 (intake manifold pressure sender -G71) and display on turbocharger test unit V.A.G 1397/A with one another.
Specification: The pressures must be the same
(tolerance ± 30 mbar)

Note:

The turbocharger test unit is required to provide an independent figure for comparison. The turbocharger test unit must be set to measuring range I (absolute pressure). A barometer can be used instead.

If value in display zone 2 deviates:

- Press the ⇒key.
- Press keys 0 and 6 for the function "End output" and confirm entry with the Q key.
- Switch off ignition.
- Renew Diesel direct injection system control unit (J248) => Page 81 .

Value in display zone 3 deviates:

- Press the ⇒key.
- Press keys 0 and 6 for the function "End output" and confirm entry with the Q key.

- Start engine and select function 08 "Read measured value block" again.
- Press keys 0, 1 and 0 for "Display group number 10" and confirm entry with Q key.
- Disconnect intake manifold pressure sender connector.
  =>Fitting locations overview, Page 38 .
- Observe figures in display zone 3 (intake manifold pressure sender).

```
Read measured value block 10
     515 mg/H     1009mbar     1009 mbar
0.0 %
```

-> It must fall constantly and then have the same value as the altitude sender (display zone 2).

If the specification is obtained:

- Renew intake manifold pressure sender with intake manifold temperature sender.

If the specification is not obtained:

- Press the ⇒key.
- Press keys 0 and 6 for the function "End output" and confirm entry with the Q key.
- Switch off ignition.

Protected by copyright. Copying for private or commercial purposes, in part or in whole, is not permitted without the express authorised by Volkswagen AG. Volkswagen AG does not guarantee or accept any liability with respect to the correctness of information in this document. Copyright by Volkswagen AG.
satelettronica

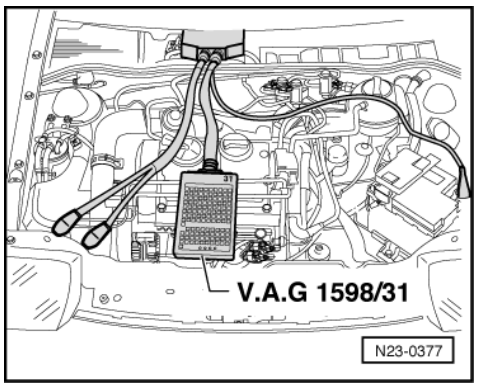

- -> Connect test box V.A.G 1598/31 to control unit wiring harness.

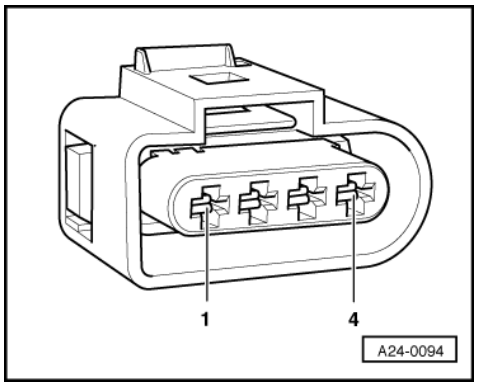

- -> Check wiring between test box and connector for open circuit using current flow diagram.
  Contact 3+ socket 31
  Contact 4+ socket 71
  Wire resistance: max. 1.5 ω
- Additionally check wires for short to one another, to vehicle earth and to battery positive.
  Specification: ∞ω

If no fault is detected in the wiring:

- Renew Diesel direct injection system control unit (J248) => Page 81 .

2.5 - Checking coolant temperature sender

Special tools, workshop equipment, testers, measuring instruments and auxiliary items required

- Fault reader V.A.G 1551 or vehicle system tester V.A.G 1552 with cable V.A.G 1551/3
- Test box V.A.G 1598/31
- Hand multimeter V.A.G 1526 or multimeter V.A.G 1715
- Adapter set V.A.G 1594
- Current flow diagram

Test sequence

- Connect fault reader V.A.G 1551 (V.A.G 1552) and select engine electronics control unit with the "Address word" 01. When doing this the engine must be running at idling speed.
  (Connecting fault reader and selecting engine electronics control unit => Page 2 .)

-> Indicated on display:

```
Rapid data transfer      HELP
Select function XX
```

- Press keys 0 and 8 for the function "Read measured value block" and confirm entry with Q key.

satelettronica

-> Indicated on display:

```
Read measured value block
Enter display group number XXX
```

- Press keys 0, 0 and 7 for "Display group number 7" and confirm entry with Q key.

```
Read measured value block 7
15.4 5C     0 %     15.9 5C     16.75C
```

-> Indicated on display:
- Observe coolant temperature figure in display zone 4. The temperature figure must Increase uniformly and without interruption.
- In case of faults the fuel temperature or - 5.4 °C is displayed as a substitute.
- If no realistic display appears in display zone 4 or the fuel temperature or - 5.4 °C is displayed as a substitute, check coolant temperature sender and wiring connections to sender as follows:
- Press the ⇒key.
- Press keys 0 and 6 for the function "End output" and confirm entry with the Q key.
- Switch off ignition.

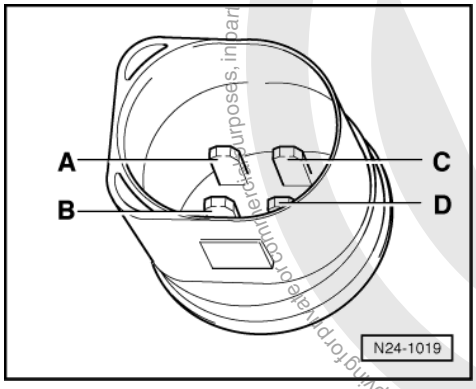

- Pull connector off sender =>Fitting locations overview, Page 38 .
- Measure resistance between sender contacts C+D on sender.

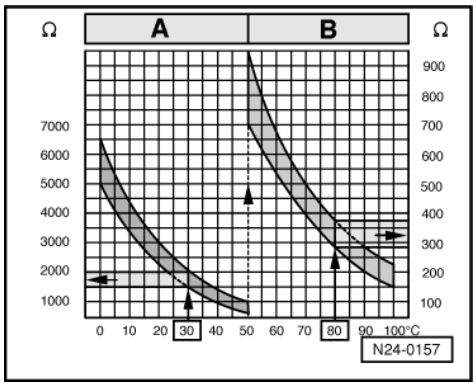

-> Specification see diagram

Scale A shows resistance values for temperature range 0...50 °C and scale B the values for temperature range 50...100 °C.

Examples:

- 30 °C corresponds to a resistance from 1500...2000 ω
- 80 °C corresponds to a resistance from 275...375 ω

If the specification is not obtained:

- Replace coolant temperature sender (G62).

Protected by copyright. Copying for private, non-commercial purposes, in part or in whole, is not permitted unless authorised by Volkswagen AG. Volkswagen AG does not guarantee or accept any liability with respect to the correctness of information in this document. Copyright by Volkswagen AG.
satelettronica

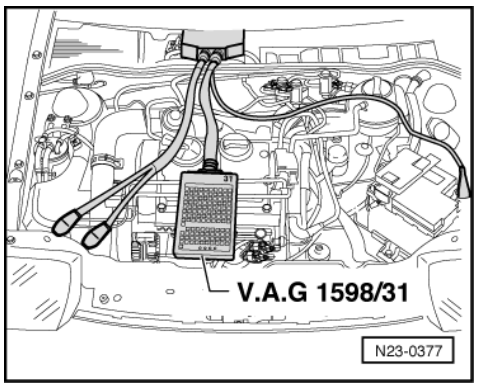

If the specification is obtained:

- -> Connect test box V.A.G 1598/31 to control unit wiring harness.

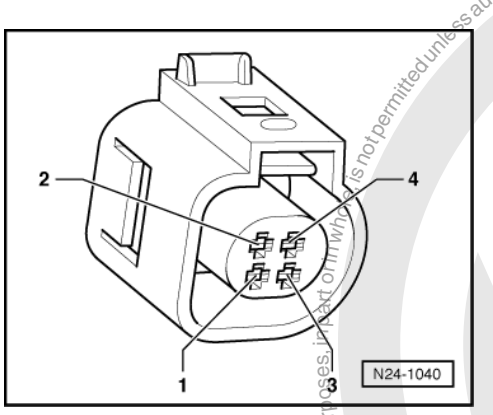

- -> Check wiring between test box and 4-pin connector for open circuit using current flow diagram.
  Contact 3 + socket 112
  Contact 4 + socket 104
  Wire resistance: max. 1.5 ω
- Additionally check wires for short to one another, to vehicle earth and to battery positive.
  Specification: ∞ω

If no fault is detected in the wiring:

- Renew Diesel direct injection system control unit (J248) => Page 81 .

2.6 - Checking brake light switch and brake pedal switch

Because the injection system operates with an accelerator pedal sender (potentiometer) which may be defective, the engine is regulated for reasons of safety when the brakes are operated. To do this the control unit requires signals from the brake light switch and also the brake pedal switch. This means that if the brakes are operated when the accelerator pedal is held at a constant position the engine is immediately reduced to idling speed. Incorrectly adjusted switches may lead to unrequired regulating action

Special tools, workshop equipment, testers, measuring instruments and auxiliary items required

- Fault reader V.A.G 1551 or vehicle system tester V.A.G 1552 with cable V.A.G 1551/3
- Test box V.A.G 1598/31
- Hand multimeter V.A.G 1526 or multimeter V.A.G 1715
- Adapter set V.A.G 1594
- Current flow diagram

Test sequence

- Connect the fault reader V.A.G 1551 (V.A.G 1552) and with ignition switched on select engine electronics control unit with the "Address word" 01.

Reproduced by copyright. Copying for private or commercial purposes, in part or in whole, is not permitted unless authorised by Volkswagen AG. Volkswagen AG does not guarantee or accept any liability with respect to the correctness of information in this document. Copyright by Volkswagen AG.
satelettronica

(Connecting fault reader and selecting engine electronics control unit => Page 2 .)

-> Indicated on display:

```
Rapid data transfer      HELP
Select function XX
```

- Press keys 0 and 8 for the function "Read measured value block" and confirm entry with Q key.

-> Indicated on display:

```
Read measured value block
Enter display group number XXX
```

- Press keys 0, 0 and 6 for "Display group number 6" and confirm entry with Q key.
- Observe display in display zone 2.

-> Specification: 0 0 0

```
Read measured value block 6
0 km/h      0 0 0      0.0 %      255
```

- Operate brake pedal slowly.

-> Specification: 0 1 1
Both displays must change from 0 to 1 at same time.

```
Read measured value block 6
0 km/h      0 1 1      0.0 %      255
```

- Centre display = Brake pedal switch
- Right-hand display = Brake light switch

Release brake pedal slowly into rest position again.

-> Both displays must change from 1 to 0 again.

```
Read measured value block 6
     0 km/h     0     0     0     0.0 %
255
```

If one or both displays do not change:

- Check switches or wiring to the switches:

=> Current flow diagrams, Electrical fault finding and Fitting locations binder

2.7 - Checking clutch pedal switch

The clutch pedal switch supplies the control unit with information as to whether the clutch is engaged or disengaged. If the clutch is being operated the injected quantity is momentarily reduced. This prevents engine jerks.

Special tools, workshop equipment, testers, measuring instruments and auxiliary items required

- Hand multimeter V.A.G 1526 or multimeter V.A.G 1715
- Fault reader V.A.G 1551 (or vehicle system tester V.A.G 1552) with cable V.A.G 1551/3
- Adapter set V.A.G 1594
- Test box V.A.G 1598/31
- Current flow diagram

Test sequence

- Connect the fault reader V.A.G 1551 (V.A.G 1552) and with ignition switched on select engine electronics control unit with the "Address word" 01.

Copyright by Volkswagen AG. Volkswagen AG does not guarantee or accept any liability with respect to the correctness of information in this document. Copyright by Volkswagen AG. Protected by copyright. Reproduction in whole or in part permitted only with the express authorised by Volkswagen AG.
satelettronica

(Connecting fault reader and selecting engine electronics control unit => Page 2 .)

-> Indicated on display:

```
Rapid data transfer      HELP
Select function XX
```

- Press keys 0 and 8 for the function "Read measured value block" and confirm entry with Q key.

-> Indicated on display:

```
Read measured value block
Enter display group number XXX
```

- Press keys 0, 0 and 6 for "Display group number 6" and confirm entry with Q key.
- Observe display in display zone 2.

-> Specification: 0 0 0

```
Read measured value block 6
     0 km/h     0     0     0     0.0 %
255
```

- Operate clutch pedal. The left-hand position must change to 1.

-> Specification: 1 0 0

```
Read measured value block 6
     0 km/h     1     0     0     0.0 %
255
```

If the specifications are not obtained:

- Press the ⇒key.
- Press keys 0 and 6 for the "End data transfer" function and confirm input with the Q key.
- Switch off ignition.

- Pull connector off clutch pedal switch => Fitting locations overview, Page 38 .

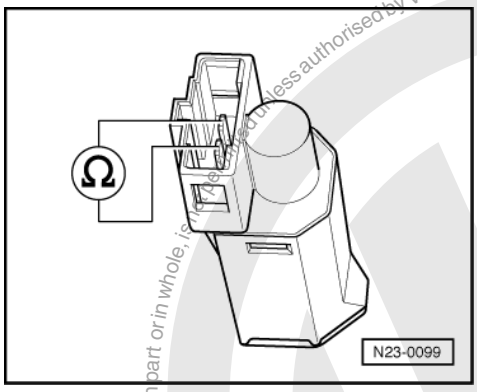

- -> Measure resistance at switch contacts.
  Specification
  Clutch not depressed: max. 10 ω
  Clutch depressed: ∞ω

If the specifications are not obtained:

- Replace clutch pedal switch (F36).

If the specifications are obtained:

Protected by copyright. Copying for private or commercial purposes, in part or in whole, is not permitted unless authorised by Volkswagen AG. Volkswagen AG does not guarantee or accept any liability with respect to the correctness of information in this document. Copyright by Volkswagen AG.
satelettronica

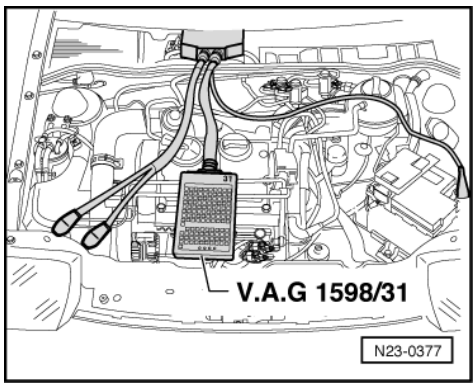

- -> Connect test box V.A.G 1598/31 to control unit wiring harness.

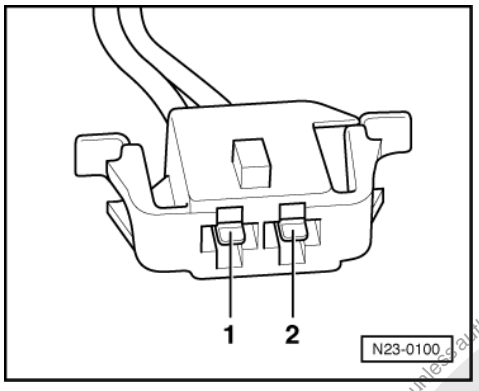

- -> Check wiring between test box and connector for open circuit using current flow diagram.
  Contact 1+ socket 1
  Contact 1+ socket 2
  Contact 2+ socket 66
  Wire resistance: max. 1.5 ω
- Additionally check wires for short to one another, to vehicle earth and to battery positive.
  Specification: ∞ω

If no fault is detected in the wiring:

- Renew Diesel direct injection system control unit (J248) => Page 81 .

2.8 - Checking intake manifold temperature sender

The intake manifold temperature sender is located together with the intake manifold pressure sender in a separate housing on intake manifold.

Special tools, workshop equipment, testers, measuring instruments and auxiliary items required

- Fault reader V.A.G 1551 or vehicle system tester V.A.G 1552 with cable V.A.G 1551/3
- Test box V.A.G 1598/31
- Hand multimeter V.A.G 1526 or multimeter V.A.G 1715
- Adapter set V.A.G 1594
- Current flow diagram

Test sequence

- Connect fault reader V.A.G 1551 (V.A.G 1552) and select engine electronics control unit with the "Address word" 01. When doing this the engine must be running at idling speed.
  (Connecting fault reader and selecting engine electronics control unit => Page 2 .)

-> Indicated on display:

Protected by copyright. Copying for private or commercial purposes, in part or in whole, is not permitted unless authorised by Volkswagen AG. Volkswagen AG does not guarantee or accept any liability with respect to the correctness of information in this document. Copyright by Volkswagen AG.
satelettronica

```
Rapid data transfer      HELP
Select function XX
```

- Press keys 0 and 8 for the function "Read measured value block" and confirm entry with Q key.

-> Indicated on display:

```
Read measured value block
Enter display group number XXX
```

- Press keys 0, 0 and 7 for "Display group number 7" and confirm entry with Q key.

-> Indicated on display:

```
Read measured value block 7
15.4 5C     0 %     15.9 5C     16.7 5C
```

- If no realistic display appears in display zone 3 or a substitute temperature of 135.9 °C is displayed, check intake manifold temperature sender and the wiring to the sender as follows:
- Press the ⇒key.
- Press keys 0 and 6 for the function "End output" and confirm entry with the Q key.
- Switch off ignition.

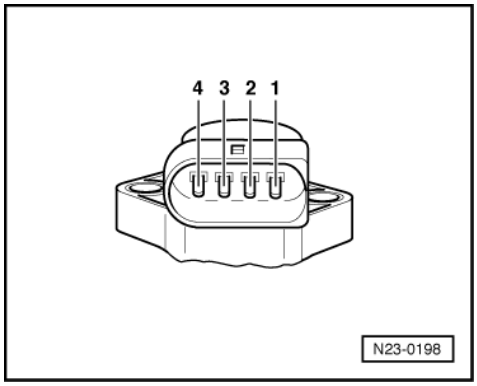

- Pull connector off sender =>Fitting locations overview, Page 38 .
- -> Measure resistance between sender contacts 1+2.

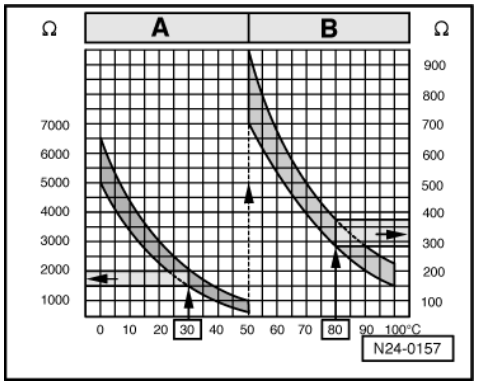

-> Specification see diagram

Scale A shows resistance values for temperature range 0...50 °C and scale B the values for temperature range 50...100 °C.

Examples:

- 30 °C corresponds to a resistance from 1500...2000 ω
- 80 °C corresponds to a resistance from 275...375 ω

If the specification is not obtained:

Protected by copyright. Copying for private or commercial purposes, in part or in whole, is not permitted unless authorised by Volkswagen AG. Volkswagen AG does not guarantee or accept any liability with respect to the correctness of information in this document. Copyright by Volkswagen AG.
satelettronica

- Replace intake manifold temperature sender (G72).

If the specification is obtained:

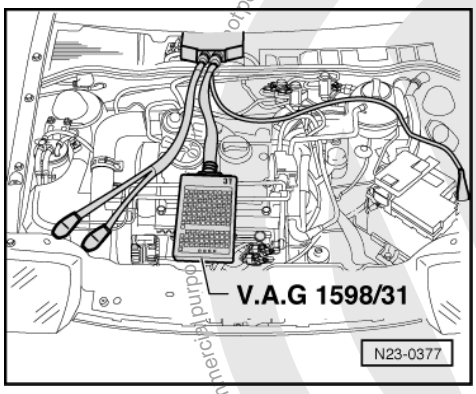

- -> Connect test box V.A.G 1598/31 to control unit wiring harness.

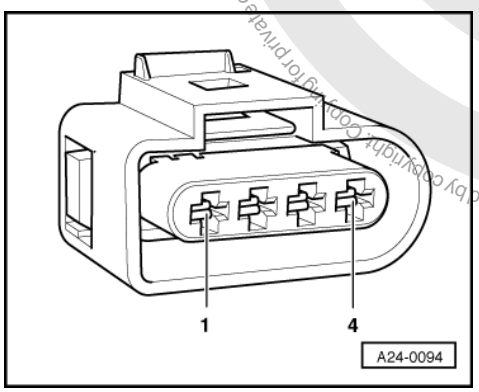

- -> Check wiring between test box and connector for open circuit using current flow diagram.
  Contact 1+ socket 52
  Contact 2+ socket 73
  Wire resistance: max. 1.5 ω
- Additionally check wires for short to one another, to vehicle earth and to battery positive.
  Specification: ∞ω

If no fault is detected in the wiring:

- Renew Diesel direct injection system control unit (J248) => Page 81 .

2.9 - Checking fuel temperature sender

Special tools, workshop equipment, testers, measuring instruments and auxiliary items required

- Fault reader V.A.G 1551 or vehicle system tester V.A.G 1552 with cable V.A.G 1551/3
- Test box V.A.G 1598/31
- Hand multimeter V.A.G 1526 or multimeter V.A.G 1715
- Adapter set V.A.G 1594
- Current flow diagram

Test sequence

- Connect fault reader V.A.G 1551 (V.A.G 1552) and select engine electronics control unit with the "Address word" 01. When doing this the engine must be running at idling speed.
  (Connecting fault reader and selecting engine electronics control unit => Page 2 .)

-> Indicated on display:

Protected by copyright. Copying for private or commercial purposes, in other media or elsewhere, is not permitted unless authorised by Volkswagen AG. Volkswagen AG does not guarantee or accept any liability with respect to the correctness of information in this document. Copyright by Volkswagen AG.
satelettronica

```
Rapid data transfer      HELP
Select function XX
```

- Press keys 0 and 8 for the function "Read measured value block" and confirm entry with Q key.

-> Indicated on display:

```
Read measured value block
Enter display group number XXX
```

- Press keys 0, 0 and 7 for "Display group number 7" and confirm entry with Q key.

-> Indicated on display:

```
Read measured value block 7
15.4 5C     0 %     15.9 5C     16.7 5C
```

- If no realistic display appears in display zone 1 or a substitute temperature of -5.4 °C is displayed, check fuel temperature sender and wiring to the sender as follows:
- Press the ⇒key.
- Press keys 0 and 6 for the function "End output" and confirm entry with the Q key.
- Switch off ignition.
- Pull connector off fuel temperature sender =>Fitting locations overview, Page 38 .
- Measure resistance between sender contacts 1+2.

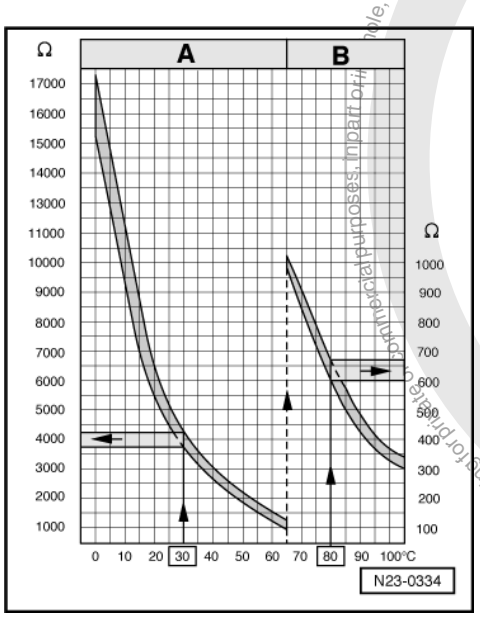

-> Specification see diagram

Scale A shows resistance values for temperature range 0...65 °C and scale B the values for temperature range 65...100 °C.

Examples:

- 30 °C corresponds to a resistance from 3790...4270 ω
- 80 °C corresponds to a resistance from 600...660 ω

If the specification is not obtained:

- Renew fuel temperature sender.

If the specification is obtained:

Protected by copyright. Copying for private or commercial purposes, in part or in whole, is not permitted unless authorised by Volkswagen AG. Volkswagen AG does not guarantee or accept any liability with respect to the correctness of information in this document. Copyright by Volkswagen AG.
satelettronica

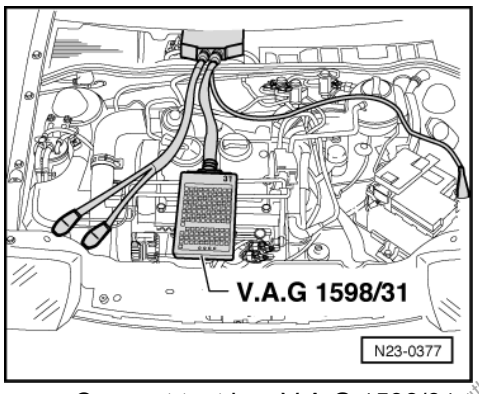

- -> Connect test box V.A.G 1598/31 to control unit wiring harness.
- Check wiring between test box and connector for open circuit using current flow diagram.
  Contact 1+ socket 103
  Contact 2+ socket 111
  Wire resistance: max. 1.5 ω

- Additionally check wires for short to one another, to vehicle earth and to battery positive.
  Specification: ∞ω

If no fault is detected in the wiring:

- Renew Diesel direct injection system control unit (J248) => Page 81 .

2.10 - Checking air mass meter

The air mass meter signal is used by the control unit to calculate the quantity injected and to control the required exhaust gas recirculation. The smaller the signal from air mass meter the smaller the quantity of fuel injected.

Special tools, testers, measuring instruments and auxiliary items required

- Fault reader V.A.G 1551 or vehicle system tester V.A.G 1552 with cable V.A.G 1551/3
- Test box V.A.G 1598/31
- Hand multimeter V.A.G 1526 or multimeter V.A.G 1715
- Adapter set V.A.G 1594
- Current flow diagram

Test sequence

- Connect fault reader V.A.G 1551 (V.A.G 1552) and select engine electronics control unit with the "Address word" 01. When doing this the engine must be running at idling speed.
  (Connecting fault reader and selecting engine electronics control unit => Page 2 .)

Warning! Secure fault reader to rear seat and operate from this position.

-> Indicated on display:

```
Rapid data transfer      HELP
Select function XX
```

- Press keys 0 and 8 for the function "Read measured value block" and confirm entry with Q key.

-> Indicated on display:

```
Read measured value block
Enter display group number XXX
```

- Press keys 0, 1 and 0 for "Display group number 10" and confirm entry with Q key.
- Observe display in display zone 1.

Protected by copyright. Copying for private or commercial purposes, in part or in whole, is not permitted unless authorised by Volkswagen AG. Volkswagen AG does not guarantee or accept any liability with respect to the correctness of information in this document. Copyright by Volkswagen AG.
satelettronica

```
Read measured value block 10
209 mg/H     1027 mbar     1011 mbar     0.0 %
```

-> Specification: 200...320 mg/H

If the specification is not obtained:

- Check exhaust gas recirculation:

=> Repair group 26; Exhaust gas recirculation; Checking exhaust gas recirculation Exhaust gas recirculation Checking exhaust gas recirculation

If the specification is obtained:

- Accelerate vehicle from approx. 1500 rpm at full throttle.
- Press PRINT key on V.A.G 1551 at approx. 3000 rpm. The accelerator pedal must be fully depressed at this moment in time.

```
Read measured value block 10
830 mg/H     1027 mbar     1850 mbar     100 %
```

-> Specification in display zone 4: 100 % (accelerator pedal position)

If the specification is not obtained:

- Repeat test and accelerate vehicle at full throttle.

```
Read measured value block 10
830 mg/H     1027 mbar     1850 mbar     100 %
```

-> Specification in display zone 1 (mass of air drawn in):
Above 700 mg/H

If the specification is not obtained:

- Renew air mass meter.

If a constant 539 mg/H (predetermined substitute value) is displayed in display zone 1.

- Press the ⇒key.
- Press keys 0 and 6 for the function "End output" and confirm entry with the Q key.
- Switch off ignition.

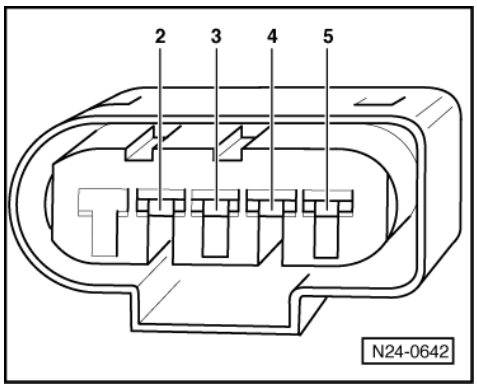

- Disconnect connector for air mass meter
=>Fitting locations overview, Page 38 .
- Switch on ignition.
- -> Measure air mass meter voltage supply between following connector contacts:

Connector on -G70 contact	Specification
2 + Earth	App. battery voltage
2 + 3	App. battery voltage
4 + earth	Approx. 5 V

Protected by copyright. Copying for private and commercial purposes, in part or in whole, is not permitted unless authorised by Volkswagen AG. Volkswagen AG does not guarantee or accept any liability with respect to the correctness of information in this document. Copyright by Volkswagen AG.
satelettronica

Connector on -G70 contact	Specification
4 + 3	Approx. 5 V

If the specifications are not obtained:

- Switch off ignition.

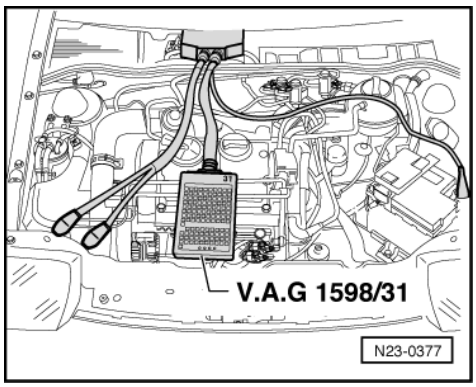

- -> Connect test box V.A.G 1598/31 to control unit wiring harness.

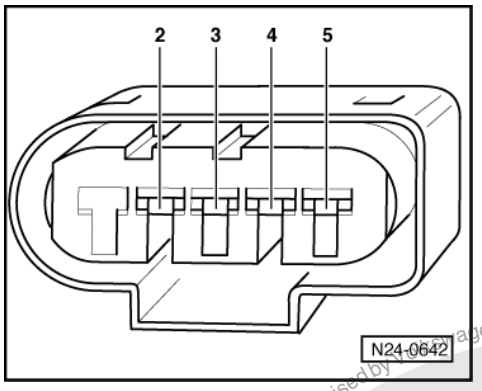

- -> Check wiring between test box and connector for open circuit using current flow diagram.
  Contact 2+ socket 1 and 2
  Contact 3+ socket 49
  Contact 4+ socket 30
  Contact 5+ socket 68
  Wire resistance: max. 1.5 ω
- Additionally check wires for short to one another, to vehicle earth and to battery positive.
  Specification: ∞ω

If no fault is detected in the wiring:

- Renew Diesel direct injection system control unit (J248) => Page 81 .

Protected by copyright. Copying for private or commercial purposes, in part or in whole, is not permitted unless authorised by Volkswagen AG. Volkswagen AG does not guarantee or accept any liability with respect to the correctness of information in this document. Copyright by Volkswagen AG.
satelettronica

2.11 - Checking intake manifold flap change-over

Special tools, testers, measuring instruments and auxiliary items required

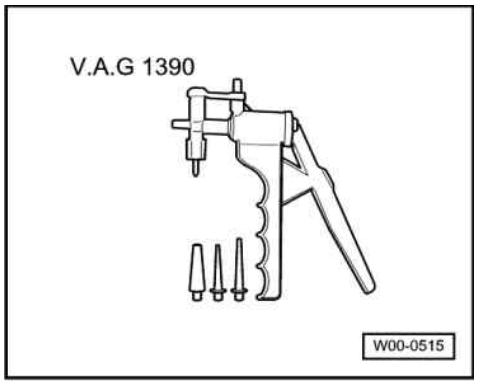

- -> Hand vacuum pump V.A.G 1390
- Test box V.A.G 1598/31
- Hand multimeter V.A.G 1526 or multimeter V.A.G 1715
- Adapter set V.A.G 1594
- Current flow diagram

Checking function

- Start engine and run at idling speed.
- Switch off ignition.
- Observe positioning lever on intake manifold flap (2nd person required).

- The intake manifold flap must, after switching off ignition, close and after approx. 3 seconds open again.

If change-over does not occur, the following checks must be carried out.

- Check intake manifold flap change-over mechanics for freedom of movement. To do this operate rods by hand.
- Check function of vacuum positioning element with hand vacuum pump V.A.G 1390.
- Check vacuum pipes for correct connection.

If no fault is found in the mechanical components:

- Check intake manifold flap change-over valve.

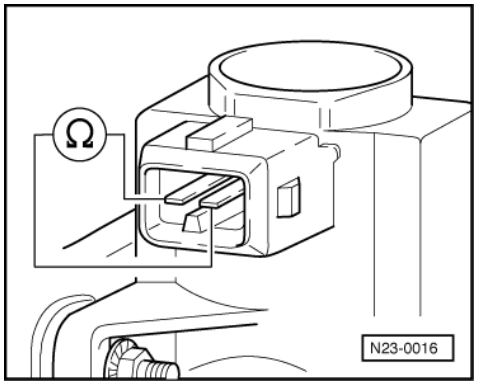

Test sequence

- Pull off connector on intake manifold flap change-over valve => Fitting locations overview, Page 38 .
- -> Measure resistance between change-over valve contacts.

Protected by copyright. Copyright by Volkswagen AG. Volkswagen AG does not guarantee or accept any liability with respect to the correctness of information in this document. Copyright by Volkswagen AG. Copying for private or commercial purposes, in part or in whole, is not permitted unless authorised by Volkswagen AG.
satelettronica

Specification: 25 ... 45 ω

If the specification is not obtained:

- Renew intake manifold flap change-over valve.

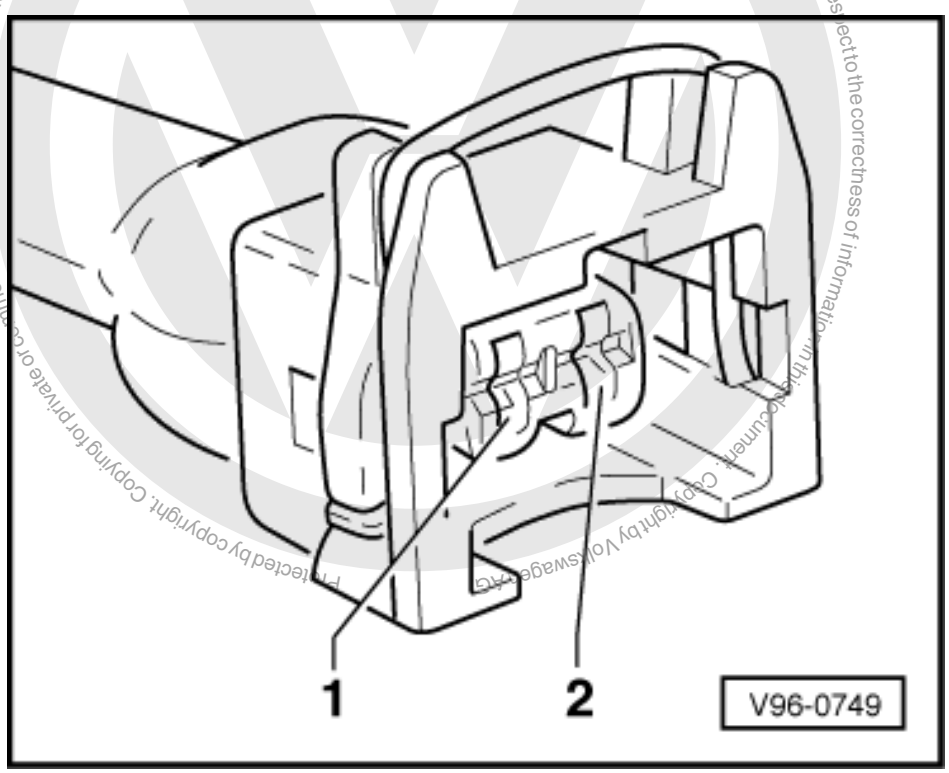

If the specification is obtained:

- -> Set multimeter to measure voltage and connect to contacts 1 and 2 of disconnected connector from intake manifold flap change-over valve.
- Start engine and run at idling speed.

  Specification: Battery voltage

- Switch off ignition.

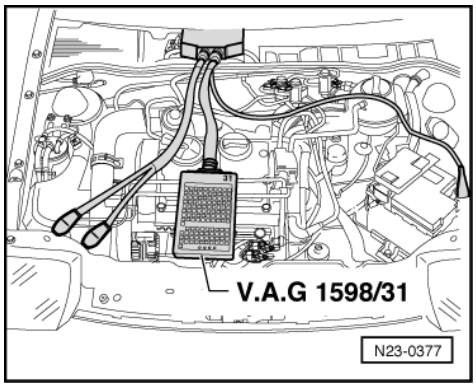

- The voltage value must fall to 0 V after approx. 3 seconds.

If the voltage values do not change as described:

- -> Connect test box V.A.G 1598/31 to control unit wiring harness.

Protected by copyright. Copyright by Volkswagen AG. Copying for private or commercial purposes, in part or in whole, is not permitted unless authorised by Volkswagen AG. Volkswagen AG does not guarantee or accept any liability with respect to the correctness of information in this document.
satelettronica

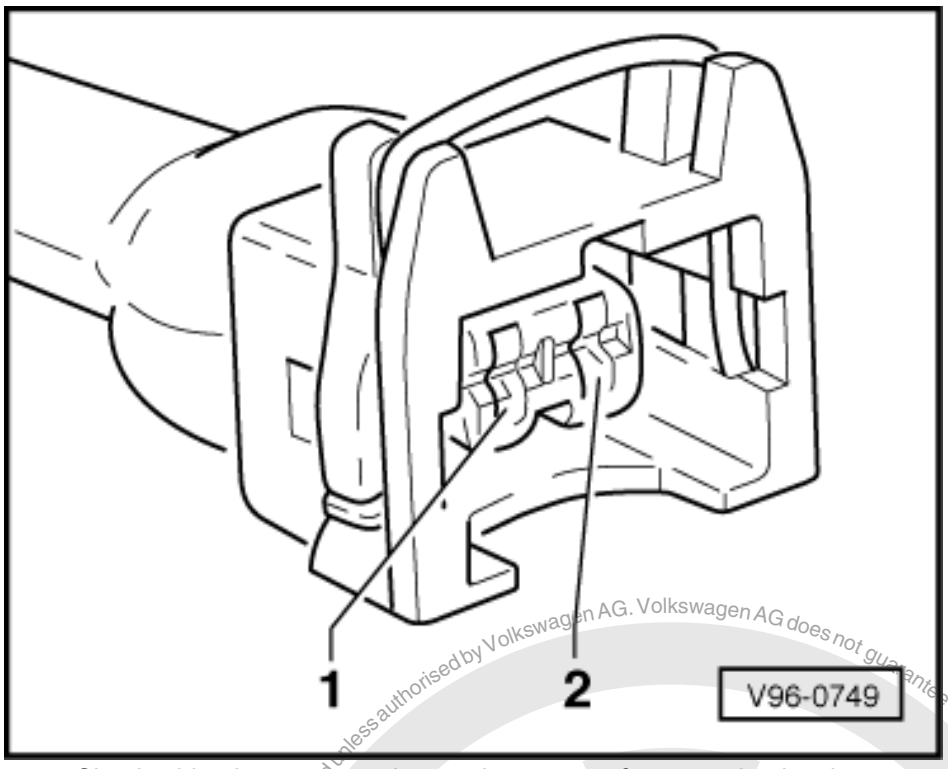

- -> Check wiring between test box and connector for open circuit using current flow diagram.
  Contact 1+ socket 1 and 2
  Contact 2+ socket 81
  Wire resistance: max. 1.5 ω
- Additionally check wires for short to one another, to vehicle earth and to battery positive.
  Specification: ∞ω

If no fault is detected in the wiring:

- Renew Diesel direct injection system control unit (J248) => Page 81 .

2.12 - Checking unit injector valves

Special tools, workshop equipment, testers, measuring instruments and auxiliary items required

- Fault reader V.A.G 1551 or vehicle system tester V.A.G 1552 with cable V.A.G 1551/3
- Test box V.A.G 1598/31
- Hand multimeter V.A.G 1526 or multimeter V.A.G 1715
- Adapter set V.A.G 1594
- Current flow diagram

Test sequence

- Connect fault reader V.A.G 1551 (V.A.G 1552) and select engine electronics control unit with the "Address word" 01. When doing this the engine must be running at idling speed.
  (Connecting fault reader and selecting engine electronics control unit => Page 2 .)

Note:

If the engine does not start, check resistance of unit injector valves => Page 71 .

-> Indicated on display:

```
Rapid data transfer     HELP
Select function XX
```

Protected by copyright. Copyright by Volkswagen AG. Volkswagen AG does not guarantee or accept any liability with respect to the correctness of information in this document. Copying for private or commercial purposes, in part or in whole, is not permitted unless authorised by Volkswagen AG.
satelettronica

- Press keys 0 and 8 for the function "Read measured value block" and confirm entry with Q key.

-> Indicated on display:

```
Read measured value block
Enter display group number XXX
```

- Press keys 0, 1 and 8 for "Display group number 18" and confirm entry with Q key.

-> Indicated on display:
Display zone: 1 = No.1 cyl., 2 = No. 2 cyl., 3 = No. 3 cyl.

```
Read measured value block 18
0     0     0
```

- "0" must be indicated in the 3 display zones.

If a number other than 0 is displayed:

- Press the ⇒key.
- Press keys 0 and 6 for the "End data transfer" function and confirm input with the Q key.
- Switch off ignition.
- Check resistance of unit injector valves => Page 71 .

Checking resistance of unit injector valves

- Disconnect unit injector connector on cylinder head
  =>Fitting locations overview, Page 38 .

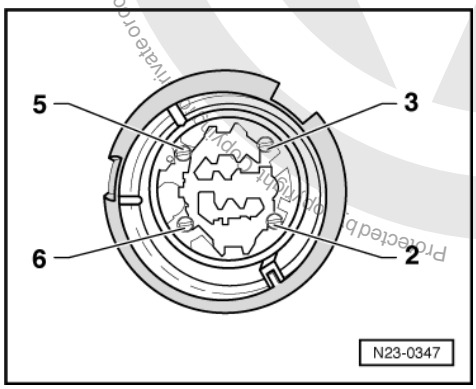

- -> Check unit injector valves resistance between connector contacts
  No. 1 Cyl.: contacts 6+3
  No. 2 Cyl.: contacts 6+5
  No. 3 Cyl.: contacts 6+2
  Specification: approx. 0.5 ω
- Additionally check wires for short to one another and to vehicle earth.
  Specification: ∞ω

If the specification is obtained:

- Check wiring to control unit using current flow diagram => Page 72 .

If the specification is not obtained:

- Remove upper toothed belt guard and cylinder head cover.
- Lever connector off the 3 unit injectors using a screwdriver. To avoid canting, support opposite side of connector with light finger pressure.

- Check resistance of unit injector valves at contacts of unit injector valves
  Specification : approx. 0.5 ω

If the specification is not obtained:

Protected by copyright. Copyright by Volkswagen AG. Volkswagen AG does not guarantee or accept any liability with respect to the correctness of information in this document. Copyright by Volkswagen AG. Private or commercial purposes in whole, is not permitted unless authorised by Volkswagen AG.
satelettronica

- Renew defective unit injector
  =>Page 48 .

If the specification is obtained:

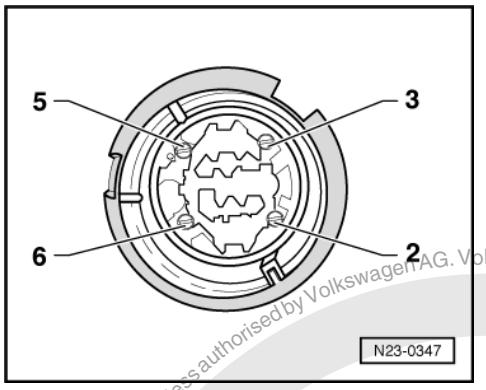

- -> Check wiring for open circuit between unit injector connector and the 3 connectors (contact 2).
  No. 1 Cyl.: contact 2 (grey)+contact 3
  No. 2 Cyl.: contact 2 (red)+contact 5
  No. 3 Cyl.: contact 2 (yellow)+contact 2
  Wire resistance: max. 1.5 ω
- Check wiring for open circuit between unit injector connector and the 3 connectors (contact 1).
  Contact 1 (brown)+ contact 6
  Wire resistance: max. 1.5 ω
- Additionally check wires for short to one another.
  Specification: ∞ω

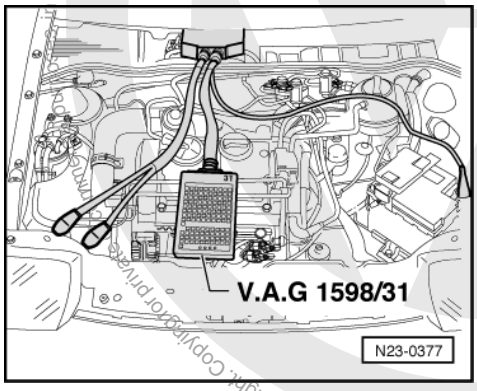

Checking wiring to control unit

- -> Connect test box V.A.G 1598/31 to control unit wiring harness.

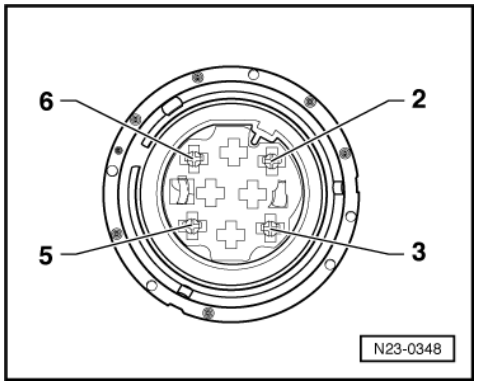

- -> Check wiring between test box and connector for open circuit using current flow diagram.
  Contact 6+socket 114
  Contact 3+socket 116
  Contact 5+socket 118

satelettronica

Contact 2+socket 121
Wire resistance: max. 1.5 ω
- Additionally check wires for short to one another, to vehicle earth and to battery positive.
Specification: ∞ω

If no fault is detected in the wiring:

- Renew Diesel direct injection system control unit (J248) => Page 81 .

2.13 - Checking camshaft position Hall sender

Special tools, workshop equipment, testers, measuring instruments and auxiliary items required

- Test box V.A.G 1598/31
- Hand multimeter V.A.G 1526 or multimeter V.A.G 1715
- Adapter set V.A.G 1594
- Current flow diagram

Test conditions

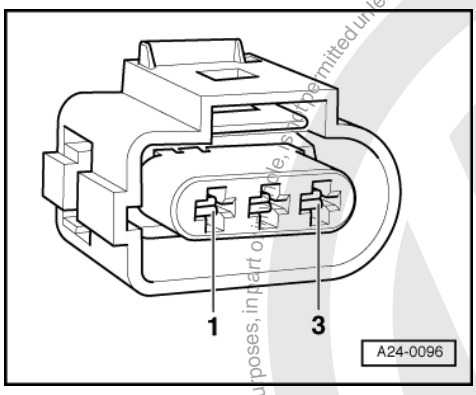

- Fuses 23 and 37 OK.

Test sequence

- Pull 3-pin connector off Hall sender
=>Fitting locations overview, Page 38 .
- -> Connect multimeter using aux. cables from V.A.G 1594 to measure voltage at contacts 1 (positive) and 3 (earth) of Hall sender connector.

- Switch on ignition.
Specification: Battery voltage

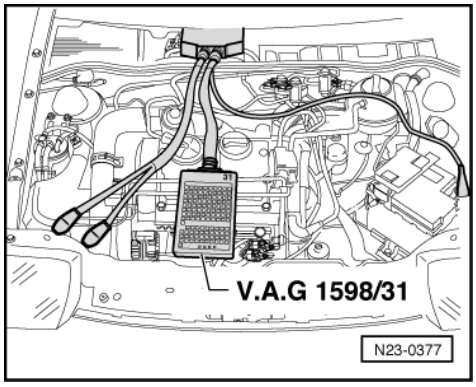

- Switch off ignition.

Protected by copyright. Copyright by Volkswagen AG.
Copyright by Volkswagen AG. Volkswagen AG does not guarantee or accept any liability with respect to the correctness of information in this document.
satelettronica

If no voltage is present:

- -> Connect test box V.A.G 1598/31 to control unit wiring harness.

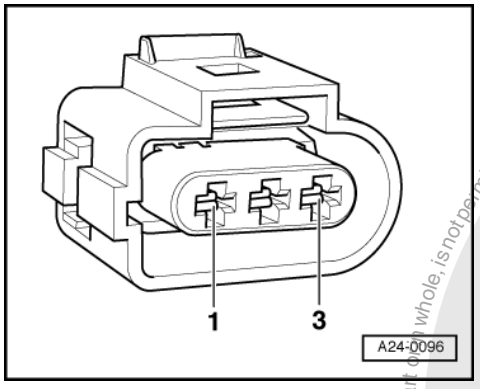

- -> Check wiring between test box and 3-pin connector for open circuit using current flow diagram.
  Contact 1+socket 1/2
  Contact 2+socket 109
  Contact 3+socket 101
  Wire resistance: Max. 1.5 ω
- Additionally check wires for short to one another, to vehicle earth and to battery positive.
  Specification: ∞ω

If no wiring fault is detected and voltage was present between contacts 1+3:

- Renew Hall sender (G40)

=> Repair group 15; Removing and installing cylinder head Removing and installing cylinder head

If no wiring fault is detected and no voltage was present between contacts 1+3:

- Renew Diesel direct injection system control unit (J248) => Page 81 .

3 - Checking additional signals

3.1 - Checking additional signals

3.2 - Checking speed signal

Special tools, workshop equipment, testers, measuring instruments and auxiliary items required

- Fault reader V.A.G 1551 or vehicle system tester V.A.G 1552 with cable V.A.G 1551/3
- Test box V.A.G 1598/31
- Adapter set V.A.G 1594
- Diode test lamp V.A.G 1527
- Current flow diagram

Test conditions

- Speedometer OK., checking:

=> Electrical system; Repair group 01; Dash panel insert self-diagnosis; Final control diagnosis Dash panel insert self-diagnosis Final control diagnosis

Protected by copyright. Copyright for private or commercial purposes, in part or in whole, is not permitted unless authorised by Volkswagen AG. Volkswagen AG does not guarantee or accept any liability with respect to the correctness of information in this document. Copyright by Volkswagen AG.
satelettronica

Note:

To check the speed signal the vehicle must be driven. To do this a second person is necessary.

Warning!
Secure fault reader to rear seat and operate from this position.

Test sequence

- Connect fault reader V.A.G 1551 (V.A.G 1552) and select engine electronics control unit with the "Address word" 01. When doing this the engine must be running at idling speed.
  (Connecting fault reader and selecting engine electronics control unit => Page 2 .)

-> Indicated on display:

```
Rapid data transfer      HELP
Select function XX
```

- Press keys 0 and 8 for the function "Read measured value block" and confirm entry with Q key.

-> Indicated on display:

```
Read measured value block
Enter display group number XXX
```

- Press keys 0, 0 and 6 for "Display group number 6" and confirm entry with Q key.
- Carry out a test drive and compare display with speedometer (2nd person required).

-> Specification display zone 1: Approx. road speed.

```
Read measured value block 6
    55 km/h     0     0     0     60.5%
255
```

- Press ⇒key.
- Press keys 0 and 6 for the function "End output" and confirm entry with the Q key.

If no speed is indicated:

- Switch off ignition.

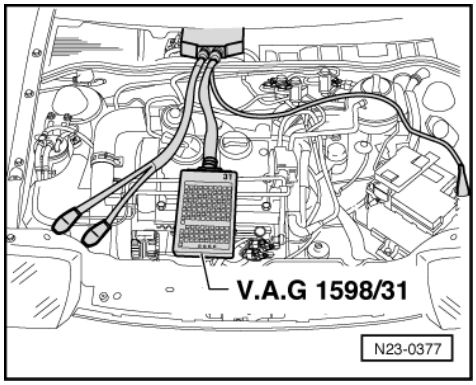

- -> Connect test box V.A.G 1598/31 to control unit wiring harness.
- Connect multimeter to measure voltage between test box sockets 4/5+20.
- Switch on ignition.
- Lift vehicle at front left.
- Rotate front wheel and observe voltage display.
  Specification: between 0 and at least 10 Volt fluctuating

If the display does not fluctuate:

- Check wiring from engine control unit connector contact 20 to dash panel insert for open/short circuit.

Protected by copyright. Copyright by Volkswagen AG. Volkswagen AG does not guarantee or accept any liability with respect to the correctness of information in this document. Copying for private or commercial purposes, in part or in whole, is not permitted unless authorised by Volkswagen AG.
satelettronica

=> Current flow diagrams, Electrical fault finding and Fitting locations binder

3.3 - Checking signals from/to air conditioning system

Copyright by Volkswagen AG. Unauthorised use, in whole or in part, is a violation of applicable law. Volkswagen AG does not guarantee or accept any liability with respect to the correctness of information in this document.

Special tools, workshop equipment, testers, measuring instruments and auxiliary items required

- Fault reader V.A.G 1551 or vehicle system tester V.A.G 1552 with cable V.A.G 1551/3
- Test box V.A.G 1598/31
- Hand multimeter V.A.G 1526 or multimeter V.A.G 1715
- Adapter set V.A.G 1594
- Current flow diagram

Test conditions

- Air conditioner functioning OK.
- No faults must be stored in fault memory
  => Page 7 , interrogating fault memory
- Vehicle at room temperature (warmer than + 15 °C).
- Air conditioning system switched on

Checking compressor shut-off

The engine control unit receives the information that the air conditioner will be switched on shortly via the air conditioner ready signal.

Through another wiring connection, the engine control has the possibility of switching off the air conditioner compressor for various operating conditions:

- Hard acceleration from low speed
- Emergency programme (emergency running operation)
- Coolant temperatures above + 120°C
- Each start sequence for approx. 6 seconds.

Test sequence

- Connect fault reader V.A.G 1551 (V.A.G 1552) and select engine electronics control unit with the "Address word" 01. When doing this the engine must be running at idling speed.
  (Connecting fault reader and selecting engine electronics control unit => Page 2 .)

-> Indicated on display:

```
Rapid data transfer     HELP
Select function XX
```

- Press keys 0 and 3 for the function "Final control diagnosis".

-> Indicated on display:

```
Rapid data transfer     Q
03 Final control diagnosis
```

- Confirm input with Q key.

-> Indicated on display:

```
Final control diagnosis
Exhaust gas recirculation valve -N18
```

- Press the ⇒key.

-> Indicated on display:

satelettronica

```
Final control diagnosis
Conditioner compressor interruption
```

Air conditioner compressor switch-off is checked.
The conditioner compressor must stop within 5 seconds (visual check) then start approx. every 5 seconds and then stop.

If the conditioner compressor is not switched off:

- Proceed with final control diagnosis until completed.

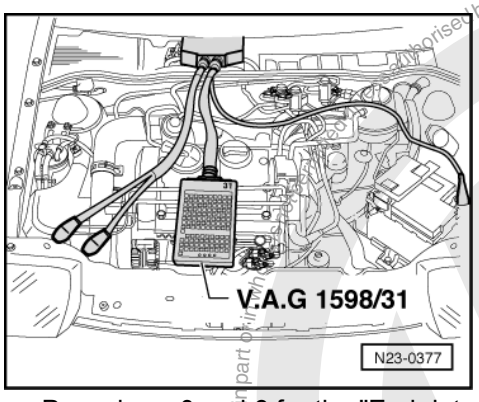

- Press keys 0 and 6 for the "End data transfer" function and confirm input with the Q key.
- -> Connect test box V.A.G 1598/31 to control unit wiring harness.

- Check wiring between test box socket 29 and the air conditioner system for open circuit using current flow diagram.
  Wire resistance: Max. 1.5 ω

=> Current flow diagrams, Electrical fault finding and Fitting locations binder

Checking air conditioner system signal to engine revolution adaption

The signal ensures that engine control unit keeps the idling speed constant even when the air conditioning system is operating at different loads.

Test sequence

- Connect fault reader V.A.G 1551 (V.A.G 1552) and select engine electronics control unit with the "Address word" 01. When doing this the engine must be running at idling speed.
  (Connecting fault reader and selecting engine electronics control unit => Page 2 .)

-> Indicated on display:

```
Rapid data transfer      HELP
Select function XX
```

- Press keys 0 and 8 for the function "Read measured value block" and confirm entry with Q key.

-> Indicated on display:

```
Read measured value block
Enter display group number XXX
```

- Press keys 0, 0 and 2 for "Display group number 2" and confirm entry with Q key.

-> Indicated on display:
(1...4 = Display zones)

```
Read measured value block 2
     1     2     3     4
```

- Observe display in display zone 3, the air conditioner must not be switched on.

Protected by copyright. Copyright by Volkswagen AG.
Copyright by Volkswagen AG. Volkswagen AG does not guarantee or accept any liability with respect to the correctness of information in this document.
Authorised by Volkswagen AG for personal and commercial purposes only. Any other use is prohibited.
satelettronica

-> Specification: 0 X 0 (air conditioning system signal)

```
Read measured value block 2
     1     2     0 1 0     4
```

- Switch on air conditioning system. Do this, depending on air conditioning system installed by pressing switch "AC" on a manually controlled air conditioning system or pressing switch "Auto" on an automatic (Climatronic) air conditioning system.
- Select lowest temperature and highest blower speed. The air conditioner compressor must run.
- Observe display in display zone 3.

-> Specification: X X 1 (air conditioning system signal)

```
Read measured value block 2
     1     2     1 1 1     4
```

Significance when display = 1			
x	x	x	Engine operating condition
		1	Air conditioner compressor switched on
	1		Idling switch closed
1			Increased idling speed because air conditioner is switched on

If the specifications are not obtained:

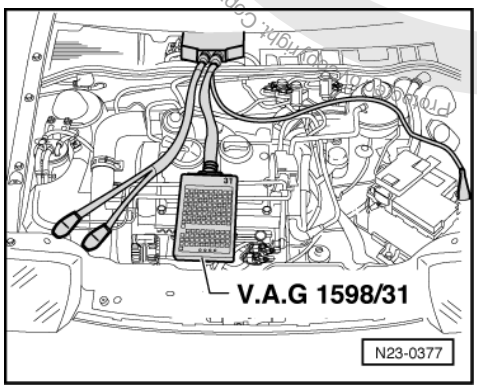

- -> Connect test box V.A.G 1598/31 to control unit wiring harness.
- Check wiring between test box socket 34 and air conditioning system for open circuit using current flow diagram.
  Wire resistance: Max. 1.5 ω

=> Current flow diagrams, Electrical fault finding and Fitting locations binder

3.4 - Checking engine speed signal

The engine speed sender signal cannot be used further in its direct form, therefore it is processed by the engine control unit for further consumers. The signal is required, by amongst other things, the automatic gearbox control unit to calculate gear changes and the rev counter in the dash panel.

Special tools, workshop equipment, testers, measuring instruments and auxiliary items required

- Test box V.A.G 1598/31
- Adapter set V.A.G 1594
- Hand multimeter V.A.G 1526 or multimeter V.A.G 1715

satelettronica

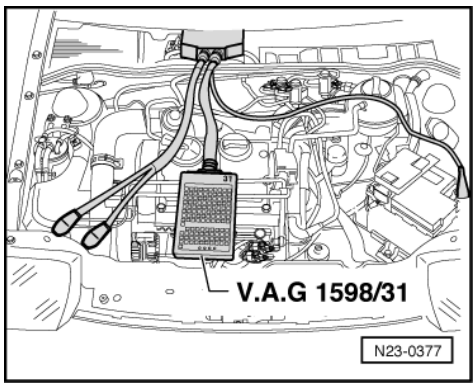

- Current flow diagram

Test sequence

- -> Connect test box V.A.G 1598/31 to control unit wiring harness.
- Check wiring for open circuit between test box contact 27 and dash panel insert using current flow diagram

=> Current flow diagrams, Electrical fault finding and Fitting locations binder

3.5 - Checking cruise control system (CCS)

The CCS has, apart from the control switches, no components of its own. All functions are provided by the diesel direct injection system.

Special tools, workshop equipment, testers, measuring instruments and auxiliary items required

- Fault reader V.A.G 1551 or vehicle system tester V.A.G 1552 with cable V.A.G 1551/3
- Test box V.A.G 1598/31
- Hand multimeter V.A.G 1526 or multimeter V.A.G 1715
- Adapter set V.A.G 1594
- Current flow diagram

Test sequence

- Connect fault reader V.A.G 1551 (V.A.G 1552) and select engine electronics control unit with the "Address word" 01. When doing this the engine must be running at idling speed.
  (Connecting fault reader and selecting engine electronics control unit => Page 2 .)

-> Indicated on display:

```
Rapid data transfer     HELP
Select function XX
```

- Press keys 0 and 8 for the function "Read measured value block" and confirm entry with Q key.

-> Indicated on display:

```
Read measured value block
Enter display group number XXX
```

- Press keys 0, 0 and 6 for "Display group number 6" and confirm entry with Q key.
- Observe display in display zone 4.

-> Specification:
0 = Cruise control system switched off
1 = Cruise control system switched on

```
Read measured value block 6
     0 km/h     0     0     0     0.0%
0
```

Protected by copyright. Copying for private or commercial purposes, in part or in whole, is not permitted unless authorised by Volkswagen AG. Volkswagen AG does not guarantee or accept any liability with respect to the correctness of information in this document. Copyright by Volkswagen AG.
satelettronica

-> If 255 is displayed in display zone 4:

```
Read measured value block 6
     0 km/h     0     0     0     0.0%
255
```

- Activating cruise control system

=> Current flow diagrams, Electrical fault finding and Fitting locations binder

If the specifications are not obtained:

- Press ⇒key.
- Press keys 0 and 6 for the function "End output" and confirm entry with the Q key.

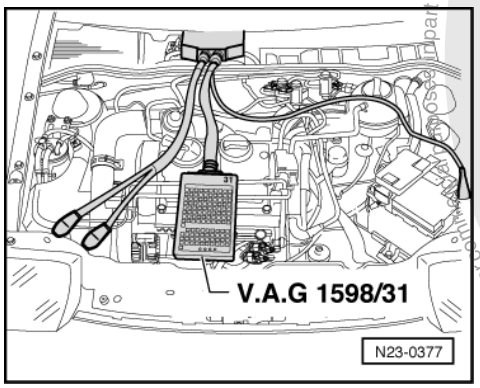

- Switch off ignition.
- -> Connect test box V.A.G 1598/31 to control unit wiring harness.
- Switch on ignition.

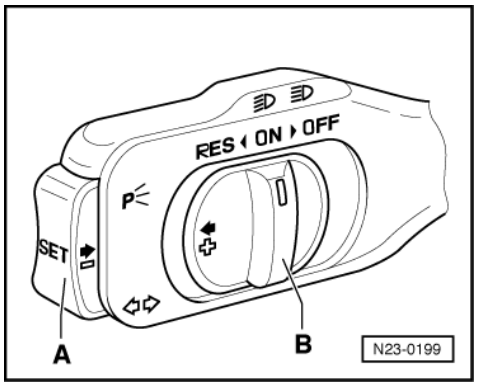

- -> Connect multimeter to measure voltage between the following test box sockets and measure voltage at the switch positions indicated.
- Socket 4/5 + 45
  Switch B to "ON" = 0 V
  Switch B to "RES" = Battery voltage
- Socket 4/5 + 44
  Switch A not operated = 0 V
  Switch A operated = Battery voltage
- Socket 4/5 + 14
  Switch B to "OFF" = 0 V
  Switch B to "ON" = Battery voltage

- Socket 4/5 + 46
  Switch B to "OFF" = 0 V
  Switch B to "ON" = Battery voltage

If the specifications are not obtained:

- Measure voltage on operating switch directly.

Protected by copyright. Copying for private or commercial purposes, in part or in whole, is not permitted unless authorised by Volkswagen AG. Volkswagen AG does not guarantee or accept any liability with respect to the correctness of information in this document. Copyright by Volkswagen AG.
satelettronica

=> Current flow diagrams, Electrical fault finding and Fitting locations binder

3.6 - Checking data bus

Function

Data bus-compatible control units are connected together via two data bus wires twisted together (CAN high and CAN low) and exchange information (messages). Information not available in the data bus will be recognised as a fault by the engine control unit as well as other CAN data bus control units.

Further information:

=> Self study programme No. 186 "The CAN data bus".

Test conditions

- A fault has been recognised by the CAN data bus self-diagnosis.

Special tools, workshop equipment, testers, measuring instruments and auxiliary items required

- Test box V.A.G 1598/31
- Hand multimeter V.A.G 1526 or multimeter V.A.G 1715
- Adapter set V.A.G 1594
- Current flow diagram

Test sequence

- Switch off ignition.
- Unlock the engine control unit connector and pull it off.
- Connect test box V.A.G 1598/31 to engine control unit. The control unit wiring harness is not connected by this action.
- Check end resistor in engine control unit.
- To do this perform a resistance measurement between the test box sockets
  Sockets 6 + 7:
  Specification: 60 ...72 ω

If the resistance measurement is outside the specified range:

- Renew engine control unit => Page 81 .

If the resistance value is within the specified range:

- Repair the fault in the wiring and in the other data bus components using current flow diagram:

=> Current flow diagrams, Electrical fault finding and Fitting locations binder

4 - Replacing, coding and matching engine control unit

4.1 - Replacing, coding and matching engine control unit

4.2 - Replacing engine control unit

Special tools, workshop equipment, testers, measuring instruments and auxiliary items required

- Fault reader V.A.G 1551 with cable V.A.G 1551/3

satelettronica

Work sequence

- First print out the control unit identification and thereby the previous control unit coding as follows:
- Connect fault reader V.A.G 1551 (V.A.G 1552) and select the engine electronics control unit with the "address word" 01
  => Page 2 ; Connecting fault reader and selecting engine electronics control unit.

-> Control unit identification will be indicated on display of fault reader V.A.G 1551:

```
045906019 1.4ltr. R3 EDC 0000 SG 1040
Coding 00002     WSC 00000
```

- Print out the control unit identification by pressing the fault reader print button.
- Press ⇒ key.

- Press keys 0 and 6 for the function "End output" and confirm entry with the Q key.
- Switch off ignition.
- Remove the wiper arms and the cowl panel:

=> Electrical system; Repair group 92; windscreen wiper system; removing and installing windscreen wiper system windscreen wiper system removing and installing windscreen wiper system

- Release connector from control unit and pull off.

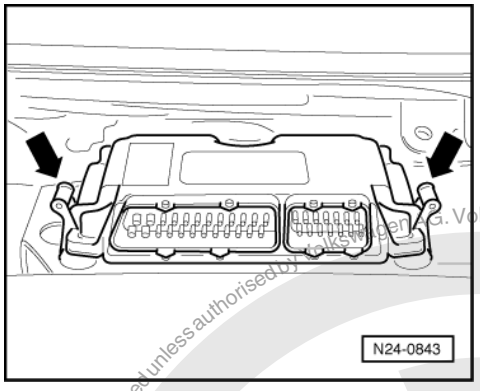

- -> Unclip control unit from bracket -arrows-.
- Install new control unit.
- Check the previous coding and the coding of the new control unit => Page 82 .
- Adapt (match) engine control unit to the electronic immobilizer => Page 83 .
- Then interrogate the fault memory of the new engine control unit and erase the fault memory if necessary, erasing fault memory => Page 8 .

4.3 - Coding engine control unit

If the appropriate code for the vehicle is not displayed or if the control unit has been renewed, the control unit must be coded as follows.

Special tools, workshop equipment, testers, measuring instruments and auxiliary items required

◆ Fault reader V.A.G 1551 (or vehicle system tester V.A.G 1552) with cable V.A.G 1551/3

Work sequence

- Connect fault reader V.A.G 1551 (V.A.G 1552) and select engine electronics control unit with the "Address word" 01. When doing this the ignition must be switched on.
  (Connecting fault reader and selecting engine electronics control unit => Page 2 .)
- Press ⇒key.

-> Indicated on display:

satelettronica

```
Rapid data transfer      HELP
Select function XX
```

- Press keys 0 and 7 for the function "Code control unit" and confirm entry with Q key.

-> Indicated on display:

```
Code control unit      Q
Input code number xxxxx (0-32000)
```

- Enter the appropriate code number for this vehicle and confirm with Q key.

Coding	For vehicles with
00001	Automatic gearbox
00002	Manual gearbox
00003	Crash shut-off and CAN data bus Manual gearbox and ABS

-> Control unit identification will be indicated on display of fault reader V.A.G 1551:

```
045906019 1.4ltr. R3 EDC 0000 SG 1040
Coding 00002      WSC 00000
```

- Switch ignition off and then on again.

Note:

The coding entered will be activated by switching the ignition off and then on again. If after entering the valid code the ignition is not switched off and on again, the fault "Control unit incorrectly coded" in the fault memory cannot be erased.

- Adapt (match) engine control unit to the electronic immobilizer => Page 83
- Erase fault memory => Page 8

4.4 - Matching engine control unit to electronic immobilizer

Special tools, workshop equipment, testers, measuring instruments and auxiliary items required

◆ Fault reader V.A.G 1551 (or vehicle system tester V.A.G 1552) with cable V.A.G 1551/3

Test conditions

• Authorized vehicle key required.

Work sequence

- Connect fault reader V.A.G 1551 or vehicle system tester V.A.G 1552 with cable V.A.G 1551/3.
- Switch on ignition.
- Operate fault reader or vehicle system tester taking into account the information on the display:
- Press key 1 for "Rapid data transfer".
- Press keys 2 and 5 for address word "Immobilizer" and confirm entry with Q key.

- Press the ⇒key.

-> Indicated on display:

```
Rapid data transfer      HELP
Select function XX
```

- Press keys 1 and 0 for function "Adaption" and confirm entry with Q key.

-> Indicated on display:

Protected by copyright. Copying for private or commercial purposes, in part or in whole, is not permitted unless authorised by Volkswagen AG. Volkswagen AG does not guarantee or accept any liability with respect to the correctness of information in this document. Copyright by Volkswagen AG.
satelettronica

```
Adaption
Feed in channel number XX
```

- Press key 0 twice for "Channel number 0" and confirm entry with Q key.

-> Indicated on display:

```
Adaption     Q
Erase learnt values?
```

- Confirm input with Q key.

-> Indicated on display:

```
Adaption
Learnt values have been erased
```

- Conclude adaption by pressing ⇒ key.
- Press keys 0 and 6 for the function "End output" and confirm entry with the Q key.
- Switch off ignition.

Note:

The identity of the engine control unit is read into the immobilizer control unit when next switching the ignition on.

Protected by copyright. Copying for private or commercial purposes, in part or in whole, is not permitted unless authorised by Volkswagen AG. Volkswagen AG does not guarantee or accept any liability with respect to the correctness of information in this document. Copyright by Volkswagen AG.
satelettronica

28 - Glow plug system

1 - Checking glow plug system

1.1 - Checking glow plug system

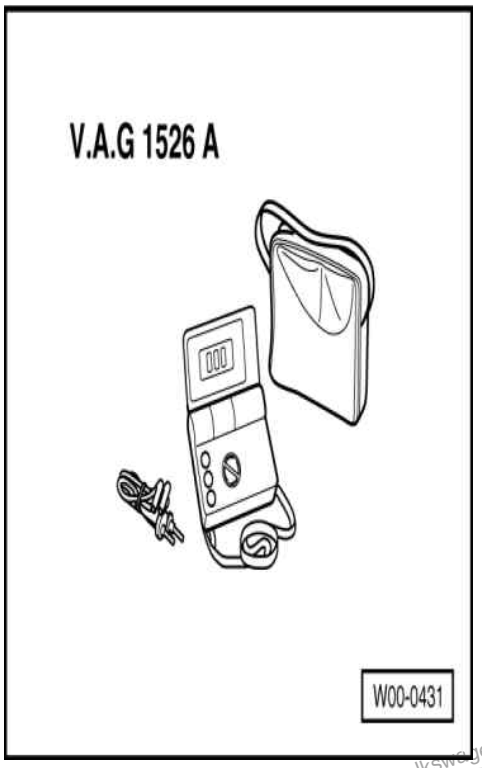

Special tools, workshop equipment, testers, measuring instruments and auxiliary items required

- V.A.G 1526 A Hand multimeter

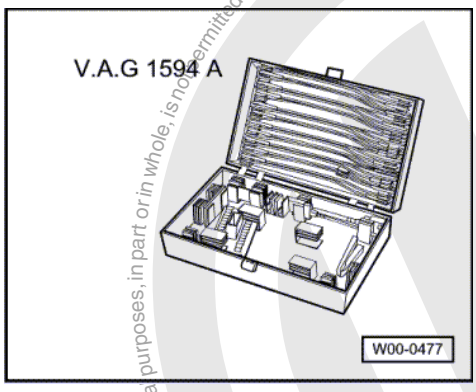

- V.A.G 1594 A Auxiliary test set

Test prerequisites:

- Battery voltage at least 11.5 V
- Ignition switched off
- Diesel direct injection system control unit (J248) OK.

satelettronica
Protected by copyright. Copying for private or commercial purposes, in part or in whole, is not permitted unless authorised by Volkswagen AG. Volkswagen AG does not guarantee or accept any liability with respect to the correctness of information in this document. Copyright by Volkswagen AG.

Protected by copyright. Copying for private or commercial purposes, in part or in whole, is not permitted unless authorised by Volkswagen AG. Volkswagen AG does not guarantee or accept any liability with respect to the correctness of information in this document. Copyright by Volkswagen AG.

- Fuse for glow plugs (SA3) OK.

Test sequence

- Pull connector off coolant temperature sender =>Fitting locations overview, Page 38 .

Note:

Pulling the connector off sender, simulates engine condition "cold" and when switching the ignition on the relevant glow period is carried out.

- Pull glow plug connector off glow plug.
- Connect multimeter to measure voltage between a glow plug connector and vehicle earth.
- Switch on ignition for approx. 20 seconds
  approx. battery voltage
  must be displayed.
- If no voltage is present:

=> Current flow diagrams, Electrical fault finding and Fitting locations binder

1.2 - Checking glow plugs

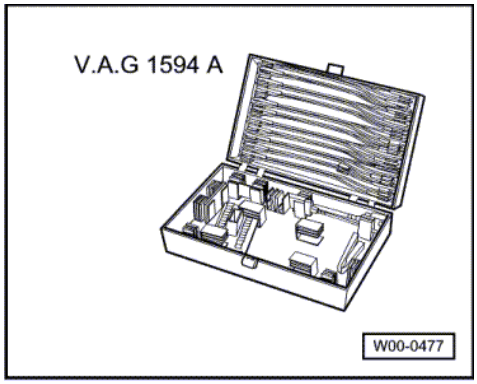

Special tools, workshop equipment, testers, measuring instruments and auxiliary items required

- V.A.G 1594 A Auxiliary test set

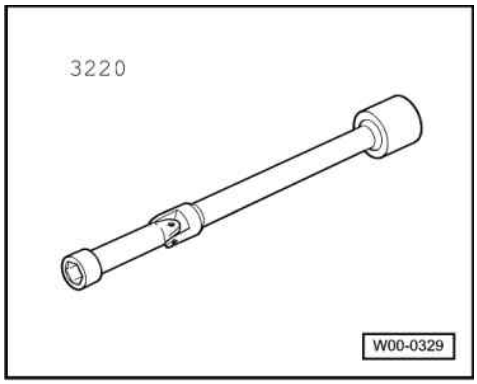

- 3220 Jointed socket
- Diode test lamp V.A.G 1527

Test prerequisites:

- Battery voltage at least 11.5 V
- Ignition switched off

satelettronica

Protected by copyright. Copyright by Volkswagen AG.
Reproduction, in part or in whole, is not permitted unless authorised by Volkswagen AG. Volkswagen AG does not guarantee or accept any liability with respect to the correctness of information in this document.

Test sequence

- Pull glow plug connector off glow plug.

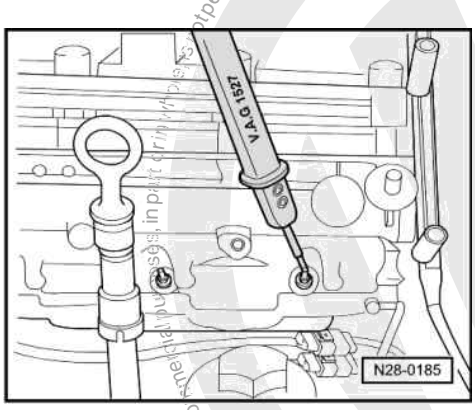

- -> Connect diode test lamp wire using auxiliary clips from auxiliary cable set to battery positive (+).
- Place diode test lamp probe on each glow plug one after the other.
  Diode lights up: glow plug OK.
  Diode does not light up: replace glow plug.
- Remove and install glow plugs with jointed spanner 3220
  Tightening torque: 15 Nm.

satelettronica